IBM Remote NETBIOS Access Facility Program

Planning

Communications Family

IBM

Personal
Computer
Software

First Edition (November, 1986)

The program product described in this manual, and all licensed material available for it, is provided by IBM under terms of the Agreement for IBM Licensed Programs.

Any reference to an IBM program product in this document is not intended to state or imply that only IBM's program product may be used. Any functionally equivalent program may be used instead.

It is possible that this material may contain reference to, or information about, IBM products (machines and programs), programming, or services that are not announced in your country. Such references or information must not be construed to mean that IBM intends to announce such IBM products, programming, or services in your country.

Products are not stocked at the address below.

A form for your comments is provided at the back of this publication. If the form has been removed, comments may be addressed to IBM Corporation, Department E02, P.O. Box 12195, Research Triangle Park, North Carolina 27709. IBM may use or distribute any of the information you supply in any way it believes appropriate without incurring any obligation whatever. You may, of course, continue to use the information you supply.

© Copyright International Business Machines Corporation 1986

Preface

What Is the IBM Remote NETBIOS Access Facility Program?

The IBM Remote NETBIOS Access Facility Program is a licensed program product that enables applications installed in an IBM Personal Computer (PC) to access a local area network (LAN) with the appropriate software without being directly connected to the LAN. Using the IBM Remote NETBIOS Access Facility Program and a LAN with the appropriate software, the user may access LAN files and devices on either an IBM Token-Ring Network or an IBM PC Network. To do this, the user needs an IBM PC, the IBM Remote NETBIOS Access Facility Program, and one of the following: a ROLM CBX II, a private branch exchange (PBX), or the public switched network (PSN).

The IBM Remote NETBIOS Access Facility Program, also called *the Facility*, has two configurations:

- The Remote Facility—installed in a PC that is not physically connected to the LAN
- The LAN-Gateway Facility—installed in a PC that is connected to the LAN and through which the Remote Facility accesses the LAN.

The Remote and LAN-Gateway Facilities operate in the background of the PC, which allows other programs to run in the foreground. You can easily activate the Remote Facility, once you have installed it, by pressing a key sequence and responding to prompts.

The IBM Remote NETBIOS Access Facility Program guides, described later, tell you how to plan for, install, configure, and operate both configurations.

Note: *The IBM Program License Agreement requires that a separate, licensed copy of the Facility be purchased for each PC using the product.*

The IBM Remote NETBIOS Access Facility Program Package

Your IBM Remote NETBIOS Access Facility Program package includes the following items:

- Two 5-1/4 inch diskettes containing the IBM Remote NETBIOS Access Facility Program files and programs, and the *IBM Remote NETBIOS Access Facility Program Installing and Configuring* soft publication (softpub) guides.
- One 3-1/2 inch diskette also containing the IBM Remote NETBIOS Access Facility Program files and programs, and the *IBM Remote NETBIOS Access Facility Program Installing and Configuring* softpub guides.

  Note: *Depending on your IBM PC disk drive, you will use either the two 5-1/4 inch diskettes or the one 3-1/2 inch diskette.*
- This guide, *IBM Remote NETBIOS Access Facility Program Planning*.
- *Remote User's Reference Card* containing quick-reference information, such as instructions for making and terminating connections, commands, and system messages. It also contains informational areas you fill in with the names and telephone numbers of your LAN-Gateway system administrators.

The IBM Remote NETBIOS Access Facility Program Guides

You do not have to read all of the information contained in each of the three guides. After you read this preface, read Chapter 1 to learn more about the Facility. Then determine the role you have in planning, installing, configuring, or operating the Facility. Choose the appropriate chart in "Getting Started" on page 1-4 to direct you to the information necessary to perform those tasks.

About This Guide

IBM Remote NETBIOS Access Facility Program Planning tells you how to plan for installing and configuring the IBM Remote NETBIOS Access Facility Program. Included in its appendixes are checklists to help you collect information before installation, and error messages to help you troubleshoot problems.

IBM Remote NETBIOS Access Facility Program Softpub Guides

IBM Remote NETBIOS Access Facility Program Installing and Configuring consists of two softpub guides located on the program diskettes:

- *Installing and Configuring the Remote Facility*, from now on referred to as *Softpub Remote*, steps you through the procedures to install, configure, and initialize the Remote Facility.
- *Installing and Configuring the LAN-Gateway Facility*, from now on referred to as *Softpub LAN-Gateway*, steps you through the procedures to install, configure, and initialize the LAN-Gateway Facility.

The two softpub guides also contain a list of Acronyms and Abbreviations and a Glossary, both of which include terms used in all three guides. Chapter 3 of this guide tells you how to load and print *Softpub Remote* and *Softpub LAN-Gateway*.

What Experience Do You Need to Install or Use the Facility?

If you will be using the Remote Facility to access the LAN, then you should be familiar with:

- Your PC
- The IBM PC Disk Operating System (DOS)
- The applications you want to use on the LAN
- The call-up/sign-on and sign-off procedures for the IBM Remote NETBIOS Access Facility Program. You can obtain these procedures from the system administrator or person responsible for planning the Facility configuration.

If you are responsible for planning, installing, and configuring the Remote or the LAN-Gateway Facility, or both, then you should be:

- Familiar with IBM PC Network or IBM Token-Ring Network concepts, planning, and operations
- Experienced with the IBM PC Local Area Network Program and/or other LAN applications
- Familiar with the name and telephone number of your ROLM system administrator. You need these only if you will be using ROLM CBX (Computerized Branch Exchange) Data Communication (DataCom) Interfaces on a ROLM CBX II System.

Reference Materials

Appendix A, "Related Publications," lists the manuals that are useful references for planning, installing, configuring, and operating the hardware and software.

Appendix B, "Required Programs and Equipment," lists the hardware and software you need to run the Facility.

Now go to Chapter 1, "The IBM Remote NETBIOS Access Facility Program," to learn more about the Facility.

Contents

Chapter 1. The IBM Remote NETBIOS Access Facility Program 1-1
How the Remote Facility Works 1-1
How the LAN-Gateway Facility Works 1-2
A Basic Scenario 1-3
The Facility's Basic Functions 1-3
Getting Started 1-4

Chapter 2. Planning for Installing and Configuring 2-1
Step 1. Analyze Equipment and Program Product Requirements 2-1
Step 2. Collect Data to Configure the Remote Facility 2-2
Step 3. Distribute the Checklists 2-5
Step 4. Analyze Equipment and Program Product Requirements 2-5
Step 5. Analyze Communication Requirements 2-6
Step 6. Collect Data to Configure the LAN-Gateway Facility . . 2-7
Step 7. Distribute the Checklists 2-10
Step 8. Collect Data to Configure the LAN-Gateway Security File 2-10
Step 9. Distribute the Checklists 2-11

Chapter 3. Installing, Configuring, Initializing, and Reconfiguring 3-1
Step 1. Prepare for Installing, Configuring, and Initializing 3-1
Step 2. How You Will Set Up the Facility 3-1
Step 3. Print the Softpub Guides 3-3
Step 4. Follow the Softpub Guide 3-4
For Experienced Installers 3-4
Reconfiguring 3-6

Chapter 4. Identifying and Resolving Problems 4-1
How Do You Know when There Is a Problem? 4-1
Problems Encountered while Trying to Make a Connection 4-4
Problems Encountered after Making a Connection 4-11

Appendix A. Related Publications A-1
IBM Publications A-1
ROLM Publications A-2
Other Related Publications A-2

Appendix B. Required Programs and Equipment **B-1**
For the Remote Facility B-1
For the LAN-Gateway Facility B-3
Special Considerations when Using a ROLM CBX II B-6
Special Considerations when Using Attention Command Set Modems B-7
Special Considerations when Using Manual Dial Modems B-9

Appendix C. Performance and Compatibility **C-1**
Coexistence Considerations C-1
LAN Server Functions that Coexist with the Facility C-2
Running the Communications Server Program with the Facility . C-2
Running the IBM PC LAN Program with the Facility C-4
Restrictions on the Use of the PC Running the Facility C-5
System Administrator Notes C-5
Special NETBIOS Command Handling C-7
Other Performance Considerations C-9

Appendix D. Configuration Information Checklists **D-1**

Appendix E. Error Messages and Special Return Codes **E-1**
Error Messages E-1
Special Return Codes E-12

Index **X-1**

Chapter 1. The IBM Remote NETBIOS Access Facility Program

The IBM Remote NETBIOS Access Facility Program is a PC DOS extension. It enables an IBM Personal Computer to access (connect to) an IBM local area network (LAN) using a public or private switched network. The IBM Remote NETBIOS Access Facility Program has two configurations:

- IBM Remote NETBIOS Access Facility Program *Remote Facility*
- IBM Remote NETBIOS Access Facility Program *LAN-Gateway Facility*.

The IBM Remote NETBIOS Access Facility Program runs in the background and is normally transparent to the user. To access the LAN, the remote user presses a predefined sequence of keys and responds to a menu window. Once the connection is made, the window disappears. The user then accesses the LAN as if the IBM PC were physically attached to the LAN.

How the Remote Facility Works

The Remote Facility is installed in the PC of a user who wants to use a LAN application, but is unable to attach directly to the LAN. Using a switched network and a modem or ROLM CBX DataCom Interface, the remote user first activates the Remote Facility. The Remote Facility then dials the LAN-Gateway Facility. Once connected, the Remote Facility and the LAN-Gateway Facility emulate a NETBIOS (Network Basic Input/Output Software) interface between the remote PC and the LAN. Through this NETBIOS emulation and the appropriate application program, the Remote Facility can access LAN applications, such as operating with the IBM PC Local Area Network Program and the LAN file and printer servers.

How the LAN-Gateway Facility Works

The LAN-Gateway Facility is installed in a PC that is attached to an IBM LAN through a LAN adapter. Although only two Remote Facilities can connect to it concurrently, the LAN-Gateway Facility can be configured to recognize up to 255 different Remote Facilities. The LAN-Gateway Facility manages NETBIOS-equivalent logical connections between each Remote Facility and the LAN applications and servers. The LAN-Gateway Facility management functions include sending data between the remote PC and the LAN, and addressing data to the correct destination on the LAN.

The LAN-Gateway Facility maintains the connection between the remote PC and the LAN until one of three things occurs:

- The remote user terminates the connection
- The LAN-Gateway Facility breaks the connection because of inactivity
- The connection is lost due to communication difficulties.

Figure 1-1 illustrates the software components required to run the IBM PC Local Area Network Program on a remote PC using the IBM Remote NETBIOS Access Facility Program.

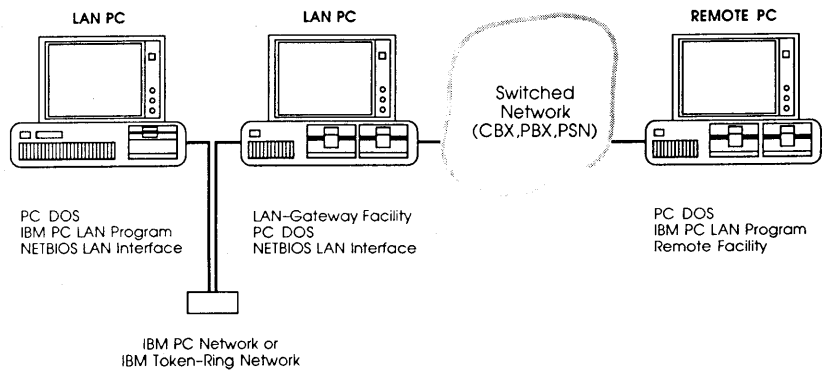

Figure 1-1. IBM PC Local Area Network Program on a LAN PC and on a Remote Facility PC

A Basic Scenario

The following scenario shows how one company might use the IBM Remote NETBIOS Access Facility Program:

A small company uses an IBM PC Network containing a file server, IBM PCs, IBM PC XTs, and printers. Its salespeople travel to customer offices to gather information.

Before acquiring the IBM Remote NETBIOS Access Facility Program, they returned to the company office to process the information on the LAN, often using PCs dedicated to other office tasks. After completing their work, the salespeople returned to the customers and presented their proposals and price quotes.

After the Facility was installed, the salespeople could access data on the LAN from the customer's office. As a result, the company cut the sales staff's travel time to and from the office and reduced the competition for LAN resources. Use of the Facility also enabled the company to be more responsive to customers' needs.

The Facility's Basic Functions

The following is a summary of the Facility's basic functions:

- Programs to simplify installation and configuration
- Diagnostic messages for problem resolution
- Support of installation on either the IBM Token-Ring Network or IBM PC Network
- Support, with some differences, of all NETBIOS commands except UNLINK (see "Special NETBIOS Command Handling" on page C-7)
- Transport of NETBIOS commands and responses between remote PC users and the NETBIOS interface of the LAN-Gateway Facility
- Remote Facility selection of up to ten LAN-Gateways
- LAN-Gateway Facility support of one or two Remote Facilities concurrently

- LAN-Gateway Facility sharing of asynchronous lines with the IBM Asynchronous Communications Server Program (see "Running the Communications Server Program with the Facility" on page C-2)
- LAN access security control through user identifications and passwords, and dial-back if desired
- Transmission speeds up to 2400 bps when using modems and up to 19.2 Kbps when using ROLM CBX DataCom Interfaces
- Termination of the connection by user request or inactivity timeout.

Getting Started

Before you read more of this guide, decide if you want to set up the Remote Facility or the LAN-Gateway Facility. Then refer to the chart under the corresponding heading.

Setting Up the Remote Facility

Using the chart below, find the tasks that you will be performing to plan, install, configure, and initialize the Remote Facility. Then read the chapters or sections that correspond to your tasks.

If You Are	Then Read
Planning for the Remote Facility	Chapter 2 and the Appendixes
Collecting configuration information for the Remote Facility	Chapter 2 and the Appendixes
Trying to identify and resolve problems	Chapter 4 and Appendix E
Using the IBM PC on which the Remote Facility runs	Appendix D
Determining the restrictions that apply to the PC running the Facility	Appendix C
Installing the Remote Facility	Chapter 3, then Sections 1 and 2 of the *Softpub Remote*
Configuring the Remote Facility	Chapter 3, then Section 3 of the *Softpub Remote*
Initializing the Remote Facility	Chapter 3, then Section 4 of the *Softpub Remote*
Making telephone connections	Section 5 of the *Softpub Remote* and the *Remote User's Reference Card*
Changing the LAN selection	Section 6 of the *Softpub Remote*
Terminating a connection	Section 7 of the *Softpub Remote* and the *Remote User's Reference Card*
Reconfiguring the Remote Facility by changing the configuration file	Chapter 2, Chapter 3, and the Appendixes, and Section 8 of the *Softpub Remote*

Setting Up the LAN-Gateway Facility

Using the chart below, find the tasks that you will be performing to plan, install, configure, and initialize the LAN-Gateway Facility. Then read the chapters or sections that correspond to your tasks.

If You Are	Then Read
Planning for the LAN-Gateway Facility	Chapter 2 and the Appendixes
Collecting configuration information for the LAN-Gateway Facility	Chapter 2 and the Appendixes
Trying to identify and resolve problems	Chapter 4 and Appendix E
Using the IBM PC on which the LAN-Gateway Facility runs	Appendix D
Determining the restrictions that apply to the PC running the Facility	Appendix C

If You Are	Then Read
Installing the LAN-Gateway Facility	Chapter 3, then Sections 1 and 2 of the *Softpub LAN-Gateway*
Configuring the LAN-Gateway Facility	Chapter 3, then Section 3 of the *Softpub LAN-Gateway*
Configuring the LAN-Gateway Facility security file	Chapter 3, then Section 4 of the *Softpub LAN-Gateway*
Initializing the LAN-Gateway Facility	Chapter 3, then Section 5 of the *Softpub LAN-Gateway*
Reconfiguring the LAN-Gateway Facility by changing the configuration or security file	Chapter 2, Chapter 3, and the Appendixes, and Section 6 of the *Softpub LAN-Gateway*

Chapter 2. Planning for Installing and Configuring

To plan for installing and configuring the Facility, see the table below to determine what you should read next. Read the specified steps to become familiar with the process. Then use photocopies of the checklists in Appendix D to record the configuration information you collect.

Note: *If your checklists have been completed by your LAN system administrator, go to Chapter 3.*

If You Are Planning For	Then Read
Remote Facility installing and configuring	Steps 1 through 3, starting on page 2-1.
LAN-Gateway Facility installing and configuring	Steps 4 through 7, starting on page 2-5.
Security file installing and configuring	Steps 8 and 9, starting on page 2-10.

Step 1. Analyze Equipment and Program Product Requirements

Make sure that you, the remote user, have all the equipment and program products necessary to run the Remote Facility. If you will be using a ROLM CBX II System for communications, you may need information about ROLM products or help from the ROLM system administrator. You may also need information about Facility performance and restrictions before installing and configuring the Remote Facility. See the following appendixes for the necessary information:

- Appendix A, "Related Publications," lists the technical publications providing references to equipment and program products.

- Appendix B, "Required Programs and Equipment," lists the IBM and ROLM equipment and the IBM program products required to install, configure, and run the Facility.
- Appendix C, "Performance and Compatibility," describes coexistence, performance, and compatibility information for the Facility, as well as restrictions on the use of the IBM PC in which it runs.

Go to Step 2.

Step 2. Collect Data to Configure the Remote Facility

In this step you, the remote user, gather the information necessary to configure the Remote Facility. Photocopy the following checklists from Appendix D and use them as you read the rest of Step 2:

- System Definition Data (Checklist 1)
- System Communication Data (Checklist 2 for modems; Checklist 3 for ROLM CBX DataCom Interfaces)
- LAN-Gateway Access Table (Checklist 4 for modems; Checklist 5 for ROLM CBX DataCom Interfaces).

System Definition Data

Each Remote Facility configuration you create can reside on a different PC drive, use a different path, use a different filename, or any combination thereof. For example, you may want to have a Remote Facility configuration file for both a manual dial and an automatic dial modem. To do so, create separate configuration files with different names, such as MANDIAL.CFG and AUTODIAL.CFG.

Before you do anything else, decide if you want to keep a single Remote Facility configuration file with the default name REMOTE.CFG. If you create more than one configuration file, or if you change the drive, the path, or the filename, record the new information on the checklists. Then gather the following information:

Note: *The Facility provides predefined configuration files. It is only necessary to change data that is not appropriate for your system.*

- The type of communication device that will be used (modems or ROLM CBX DataCom Interfaces).
- The model of the IBM PC in which the Remote Facility will be installed.
- The logical address to be assigned to the emulated LAN adapter. NETBIOS requires an "address" because the application in the Remote Facility will be accessing the LAN as if it were directly attached to the LAN.
- The keys to be pressed to start up the Remote Facility if different from the default (**Alt-L**). The default needs to be changed only if another of your programs uses **Alt-L**.

  The possible Startup Key combinations are:

  - **Alt** and any key **A** through **Z**
  - Any programmed function key **F1** through **F10**
  - **Shift** and any programmed function key **F1** through **F10**
  - **Ctrl** and any programmed function key **F1** through **F10**
  - **Alt** and any programmed function key **F1** through **F10**.
- Whether asynchronous port COM1 or COM2 is to be used for the Remote Facility communication port.

  Note: *If you are installing the Remote Facility in an IBM Personal Computer Convertible that contains an internal modem, you must select COM1 as the communication port.*

System Communication Data

Gather the following information about the Remote Facility communication interface:

- Either the type of modem or ROLM CBX system to be used as the communication interface. If the modem supports the Attention command protocol, it is an "Automatic Dial Modem."
- Either the modem dialing method or the ROLM CBX DataCom Interface hardware to be used.
- The line speed that the modem or the ROLM CBX DataCom Interface hardware will use. Modem line speeds are limited to 1200 bps or 2400 bps. Only ROLM CBX DataCom Interfaces support line speeds above 2400 bps.

- Whether 7 bits or 8 bits will be used to represent each character.
- Whether an odd, an even, or no (none) parity check bit will be used for verifying transmitted characters. If you will be using 8 data bits to represent each character, you must select "none."
- Whether one or two stop bits will be used to identify the end of a transmitted character. If you will be using 8 data bits to represent each character, you must select one stop bit.
- The optional DataCom initialization account code, if you are using a ROLM CBX II Model 8000.

LAN-Gateway Access Table

You can configure each Remote Facility for up to ten LAN-Gateways: nine permanent LAN-Gateways, and one temporary LAN-Gateway that is configured each time it is used. You must complete a separate LAN-Gateway Access Table checklist (Checklist 4 or 5, in Appendix D) for each permanent LAN-Gateway you configure for the Remote Facility.

Gather the following information for each Remote Facility you want to install:

- The name of the LAN-Gateway to which the Remote Facility will have access
- Your Remote Facility user identification or password
- The telephone number of the LAN-Gateway; or, if you will be using a ROLM CBX DataCom Interface, the ROLM CBX Datagroup name or Dataline number

  Note: *If you are using an IBM Personal Computer Convertible with an internal modem, the maximum length of the telephone number field is 32 characters.*
- The optional Datagroup password, if you will be using a ROLM CBX Datagroup name
- The optional Dataline account code, if you will be configuring for a ROLM CBX II Model 8000.

As an added security feature, you can configure the LAN-Gateway Access Table so that selected information must be entered manually before the Remote Facility will dial the LAN. This applies to all

information except the name of the LAN. To specify the information to be entered manually, enter an asterisk (*) in the corresponding configuration fields.

Go to Step 3.

Step 3. Distribute the Checklists

After recording the information on the checklists, give copies to the persons installing or configuring the Remote Facility. Copies should also go to the LAN system administrator. Then record the following information on the *Remote User's Reference Card*:

- Each LAN-Gateway system administrator's name and telephone number
- Startup Key sequence used to activate the Remote Facility, if not the default **Alt-L**
- Data for any temporary LAN-Gateway to which the Remote Facility should have access.

Go to Chapter 3 and read about installing, configuring, and initializing the Remote Facility.

Step 4. Analyze Equipment and Program Product Requirements

Make sure that you, the LAN system administrator, have all the equipment and program products necessary to run the Facility. If you need help setting up or operating your IBM Token-Ring Network or IBM PC Network, contact someone who is knowledgeable. If your LAN uses a ROLM CBX II System for communications, you may need information about ROLM products or help from the ROLM system administrator. You may also need information about Facility performance and restrictions before installing and configuring the LAN-Gateway Facility. See the following appendixes for the necessary information:

- Appendix A, "Related Publications," lists the technical publications providing references to equipment and program products.

- Appendix B, "Required Programs and Equipment," lists the IBM and ROLM equipment and the IBM program products required to install, configure, and run the Facility.
- Appendix C, "Performance and Compatibility," describes coexistence, performance, and compatibility information for the Facility, as well as restrictions on the use of the IBM PC in which it runs.

Go to Step 5.

Step 5. Analyze Communication Requirements

After gathering the information about your equipment and programs, you, the LAN system administrator, are ready to analyze communication requirements. This helps you determine the number and types of communication lines and devices, and the number of LAN-Gateway Facilities needed. The final decision regarding the numbers and types chosen depends upon the user's configuration and requirements.

In order to determine the quantity and types of lines, communication devices, and LAN-Gateway Facilities needed, the following questions should be asked:

- How many remote users will there be?
- How many calls are expected during the peak period of operation?
- What is the average call duration during the peak period?
- Do remote users require LAN access on demand without waiting, or can they wait and retry later?
- How many of the following will be used to access the LAN during the peak periods?
  - Analog modems
  - Digital equipment and lines connected to a ROLM CBX DataCom Interface.

Analysis of the answers to these questions will assist in determining the number and types of lines and data communication devices needed. In determining the number of LAN-Gateways needed you should additionally keep in mind:

- Each LAN-Gateway can be configured to recognize up to 255 unique user IDs.
- Each LAN-Gateway Facility can support two simultaneous calls.
- Both LAN-Gateway Facility ports must be attached to the same communication device type (either Attention command set modems or ROLM CBX DataCom Interfaces).

Step 6. Collect Data to Configure the LAN-Gateway Facility

In this step you, the LAN-Gateway system administrator, gather the information necessary to configure the LAN-Gateway Facility. Photocopy the following checklists from Appendix D and use them when reading the rest of Step 6:

- System Definition Data (Checklist 6)
- System Communication Data (Checklist 7 for modems; Checklist 8 for ROLM CBX DataCom Interfaces)
- LAN Definition Data (Checklist 9).

System Definition Data

Each LAN-Gateway Facility configuration you create can reside on a different LAN drive, use a different path, use a different filename, or any combination thereof. For example, you may want to keep the LAN-Gateway Facility configuration files for an IBM PC and an IBM Personal Computer AT on a single file server (drive L>). To do so, give them different names, such as L:LANPC.CFG and L:LANPCAT.CFG.

Before you do anything else, decide if you want to keep a single LAN-Gateway Facility configuration file with the default name GATEWAY.CFG. If you create more than one configuration file, or if you change the drive, the path, or the filename, record the new information on the checklists. Then gather the following information:

Note: *The Facility provides predefined configuration files. You only need to change data that is not appropriate for your system.*

- A meaningful name for the LAN-Gateway you are configuring, such as ACCOUNTINGLAN

- The type of communication devices that will be used (modems or ROLM CBX DataCom Interfaces)
- The model of the IBM PC on the LAN in which the LAN-Gateway Facility is to be installed
- The COMM ports that the LAN-Gateway Facility will use
- The COMM ports, if any, to be shared with the IBM Asynchronous Communications Server Program
- The number of seconds (up to 3600) that the LAN-Gateway Facility should wait before automatically disconnecting an inactive Remote Facility call
- The number of seconds (up to 999) that the LAN-Gateway Facility should wait, after it is initialized, before it accepts incoming calls.

System Communication Data

Gather the following information about the LAN-Gateway Facility communication interface:

- The type of modem or ROLM CBX II model (8000 or 9000) the LAN-Gateway Facility will use as a communication interface. If the modem supports the Attention command protocol, it is an "Automatic Dial Modem."
- The modem dialing method or ROLM attachment hardware supported by ROLM DataCom Interface equipment.
- The line speed that the modem or the ROLM CBX DataCom Interface hardware will use. Modem line speeds are limited to 1200 bps or 2400 bps. Only ROLM CBX DataCom Interfaces support line speeds above 2400 bps.
- Whether you will use 7 bits or 8 bits to represent each character.
- Whether you will use an odd, an even, or no (none) parity check bit for verifying character transmission. If you will be using 8 data bits to represent each character, you must select "none."
- Whether one or two stop bits will be used to identify the end of a transmitted character. If you will be using 8 bits to represent each character, you must select one stop bit.
- The optional DataCom initialization account code, if you are using a ROLM CBX II Model 8000.

LAN Definition Data

Gather the following information about the LAN and the IBM PC in which you will install the LAN-Gateway Facility:

- Whether the LAN-Gateway Facility will be installed in an IBM PC using an IBM Token-Ring Network local area network or an IBM PC Network LAN adapter
- The physical address of the LAN adapter on the LAN-Gateway Facility PC
- The maximum number of outstanding network control blocks (NCBs—from 2 to 32) that the LAN-Gateway Facility supports

  Note: *The number of NCBs available to each Remote Facility application is equal to the maximum number of NCBs divided by the number of COMM ports (one or two), as defined in the LAN-Gateway configuration file.*
- The maximum number of LAN names (from 2 to 16) that can be registered to the LAN-Gateway Facility PC
- The maximum number of open sessions (from 0 to 32) allowed the LAN-Gateway Facility PC

  Note: *The number of NCBs, LAN names, and sessions to be defined will depend on the requirements of your application.*
- The size of the internal network buffer (from 4K bytes to 512K bytes) for the LAN-Gateway Facility PC

  Note: *The internal network buffer size depends on the size of the buffers required by the application. The size of the NCB buffers used by the Facility is defined as the size of the internal network buffer divided by the number of NCBs defined. This buffer size must exceed the size of the buffer used by the application by at least 250 bytes per NCB. For the IBM PC Local Area Network Program, this is the RQB buffer for which the default is 8K bytes.*

  For example:

  8 NCBs x 8K bytes (application buffer size)
  + 8 NCBs x 250 bytes
  = 66K bytes.

- The internal network name assigned to each COMM port of the LAN-Gateway Facility PC to be shared with the IBM Asynchronous Communications Server Program, as defined in that program's configuration file, if applicable.

Step 7. Distribute the Checklists

After you, the LAN-Gateway system administrator, have recorded all the information on the checklists, give copies to the persons installing or configuring the LAN-Gateway Facility. Then give the following information to the Remote Facility user to record on the *Remote User's Reference Card*:

- Your name and telephone number
- Data for any temporary LAN-Gateway to which the remote user will need access.

Go to Step 8.

Step 8. Collect Data to Configure the LAN-Gateway Security File

In this step you, the LAN-Gateway system administrator, gather the information necessary to identify each Remote Facility to the security file. This information corresponds to Checklist 10 for modem users and Checklist 11 for ROLM CBX DataCom Interface users. You should also have the checklists for each Remote Facility configuration available (Checklists 1 through 5, Appendix D), to make sure that information is recorded correctly.

Using Dial-Back

As an optional security feature, you can configure the Facility to support Dial-Back Mode. In Dial-Back Mode, the Remote Facility establishes the connection, and the LAN-Gateway Facility then breaks the connection and dials the Remote Facility back. In dialing back, the LAN-Gateway Facility uses the telephone number, Datagroup name, or Dataline number specified in the LAN-Gateway Facility security file.

Notes:

1. *If you record only the user ID/password in the LAN-Gateway security file, the Dial-Back Mode is not supported for the remote user specified.*
2. *Dial-back is not supported through modem pool environments.*

Collecting Data

The security file can reside on a different LAN drive, separate from the LAN-Gateway Facility configuration files. Before you do anything else, define a drive, path, and filename for the security file. If you wish, you can use the default filename GATEWAY.SEC. Then gather the following information:

- The user identification or password for each Remote Facility that the installed LAN-Gateway Facility will support
- The Remote Facility telephone number, or ROLM CBX Datagroup name or Dataline number, if you want to use dial-back
- The ROLM CBX Datagroup password, if it is required for dial-back
- The ROLM CBX Dataline account code (ROLM CBX II 8000 only), if it is required for dial-back.

Step 9. Distribute the Checklists

After recording the information on the checklists, give copies to the persons installing or configuring LAN-Gateway Facility.

Now go to Chapter 3 to read about installing, configuring, and initializing the LAN-Gateway Facility and the LAN-Gateway security file.

Chapter 3. Installing, Configuring, Initializing, and Reconfiguring

This chapter tells you about preparing for and starting the installation, configuration, and initialization programs used to set up the Facility. It also tells you about reconfiguring the Facility.

- If you are installing the Facility for the first time, read Steps 1 through 4.
- If you have made changes to the configuration files, read "Reconfiguring" on page 3-6.
- If you are familiar with installing, configuring, initializing, and reconfiguring the Facility, turn to "For Experienced Installers" on page 3-4.

Step 1. Prepare for Installing, Configuring, and Initializing

Make sure that you have:

- Completed the appropriate checklists in Appendix D (or your system administrator has completed them for you)
- Made backup copies of the program diskettes using a DOS copy function
- Formatted a blank diskette (if you are going to use a diskette instead of a hard disk system).

Go to Step 2.

Step 2. How You Will Set Up the Facility

There are three procedures you will use to set up a working Facility. These procedures are briefly described in the following paragraphs. Read them for an overall understanding; detailed procedural steps are contained in the softpub guides.

Typical Problems

The following list contains typical problems that you, the remote user, might encounter when trying to call, or after connecting to, the LAN:

- The Remote Facility configuration settings do not correspond to the LAN-Gateway Facility configuration settings. For example, you configured the Remote Facility for 7 data bits per character and even parity, while the LAN-Gateway Facility is configured for 8 data bits with no parity.
- Information entered to make a connection to the LAN does not match the information in the LAN-Gateway Access Table. For example, your user ID/password does not match the one recorded in the LAN-Gateway Access Table.
- Loose connections between equipment, or inoperative equipment. For example, an EIA 232C cable connecting the external modem to the PC may be loose, or someone may have powered off the modem.
- Configuration settings do not correspond to the equipment used. For example, you may be using a manual dial modem, while the Remote Facility is configured for an Attention command protocol modem.
- Problems using the application program with the IBM Remote NETBIOS Access Facility Program. For example, you may not have sufficient processor storage to run the Facility and your application concurrently.
- Communication line problems. For example, you may have a very "noisy" line that produces too many errors.
- The LAN-Gateway Facility does not recognize the Remote Facility. For example, changes have been made to the security and configuration files. However, the IBM PC has not been restarted and the Facility has not been reinitialized to accept these changes.
- The modem or ROLM CBX Interface configuration switches are not set correctly. See "Special Considerations when Using a ROLM CBX II" on page B-6 and "Special Considerations when Using Attention Command Set Modems" on page B-7.

The following table tells you where to turn if you receive a message indicating a problem.

If You Encounter	Then Go To
A Facility error message during installation or initialization	Appendix E, look up the error message number, and perform the action specified.
The **Connection was NOT made.** error message on the Remote Facility screen	"Problems Encountered while Trying to Make a Connection" on page 4-4.
The Connection has been terminated. error message on the Remote Facility screen	"Problems Encountered after Making a Connection" on page 4-11.
A non-IBM Remote NETBIOS Access Facility Program message	"Special Return Codes" on page E-12, and your application documentation.

If all your efforts to resolve an IBM Remote NETBIOS Access Facility Program problem are unsuccessful, you may have to call your IBM representative for help. Before you call, however, be sure that you have done the following:

- Attempted to resolve the problem by following the recommended actions listed for the message displayed
- Used the correct password and telephone number
- Verified the Remote and LAN-Gateway Facility configurations
- Restarted the PC using DOS and reinitialized the Facility to accept changes made to the configuration files
- Checked all the physical connections for the Remote and LAN-Gateway Facilities
- Run the necessary diagnostic tests for modems, PCs, and network
- Eliminated the switched network as the possible problem source
- Consulted with the system administrator.

If the problem continues after you have taken these steps, contact your dealer or the IBM representative who sold you the IBM Remote NETBIOS Access Facility Program and report the problem.

Problems Encountered while Trying to Make a Connection

Problems encountered while trying to call the LAN-Gateway Facility result in the **Connection was NOT made.** error message displaying in a window at the Remote Facility PC. The window also contains another message that attempts to identify the reason for the connection failure.

Possible error messages that can appear in the window are listed on the following pages, along with corrective remote user and system administrator actions. **Messages requiring the same corrective action are grouped together.**

Note: *Certain equipment cannot provide some of the messages. For example, most Attention command protocol modems do not give specific messages (* **Line Busy** *or* **Did Not Answer** *) describing why a connection was not made. In cases where specific connection information is not provided by the equipment used, then the* **The reason that the connection could not be made is not known.** *message is displayed. If this is the case, see this message and its corrective actions on page 4-5.*

The reason that the connection could not be made is not known.

Remote User Action:

- Verify that the telephone number is correct.
- Check the physical connections between the PC, the communication interface, and the communication line.
- Retry connecting to the same LAN-Gateway.
- Try connecting to another LAN-Gateway.
- Verify that the Remote Facility configuration settings are correct, and change if necessary. If you make changes, restart the PC using DOS, reinitialize the Facility, and retry the connection.
- Report the message to the system administrator.

System Administrator Action:

- Verify that the LAN-Gateway Facility configuration settings are correct, and change if necessary. If you make changes, restart the PC using DOS, and reinitialize the Facility to make the changes effective.
- Manually dial the LAN-Gateway Facility modem number, and verify that the modem answers and that an answer tone is heard.

Note: *This message is usually caused by dialing a non-LAN-Gateway Facility PC, resulting in a response (probably voice) that is unknown to the Remote Facility.*

This message may also be the result of using modems that do not return adequate information as to why a connection could not be made (see note, page 4-4).

The LAN-Gateway name is not valid.

The User ID/Password is not valid.

The ROLM CBX/IBM Remote NETBIOS Access Facility Program configurations are incompatible.

The ROLM CBX Datagroup Name or Dataline Number is not valid.

The ROLM CBX Datagroup Password is not valid.

The ROLM CBX Dataline Account Code is not valid.

The telephone number is more than 32 characters. An IBM Personal Computer Convertible Internal Modem accepts up to 32 characters.

Remote User Action:

- Verify the Remote Facility configuration information, and change it, if necessary. If you change the configuration, restart the PC using DOS, reinitialize the Facility, then retry the connection.
- If a temporary LAN-Gateway was used, retry the connection using valid information.
- Report the message to the system administrator.

System Administrator Action:

- Contact the remote user to verify that the Remote Facility configuration matches the LAN-Gateway Facility configuration, and change them, if necessary. If you change the configuration, restart the PC using DOS, and reinitialize the Facility to make the changes effective.
- Verify the contents of the security file configuration for this user and change them, if appropriate. If you change the configuration, restart the PC using DOS, and reinitialize the Facility to make the changes effective.

Dial-back was attempted with a manual-dial modem on the LAN-Gateway.

Remote User Action:

- Report the message to the system administrator.

System Administrator Action:

- Change the LAN-Gateway security file configuration so that dial-back is not attempted on the LAN-Gateway Facility, or add an automatic-dial modem. Then restart the PC using DOS, and reinitialize the Facility to make the changes effective.

The IBM Asynchronous Communications Server Program installation is not valid.

Remote User Action:

- Report the message to the system administrator.

System Administrator Action:

- If the IBM Asynchronous Communications Server Program was not installed first, restart the PC, install the IBM Asynchronous Communications Server Program in the LAN-Gateway PC, and then reinitialize the LAN-Gateway Facility. (See "Running the Communications Server Program with the Facility" on page C-2.)
- Verify the LAN-Gateway Facility configuration, and change it, if necessary. Then restart the PC using DOS, and reinitialize the Facility to make the changes effective.

The LAN-Gateway did not answer.

Remote User Action:

- Retry the connection to the same LAN-Gateway.
- Try connecting to another LAN-Gateway on the same LAN, in case there was a port-related problem at the LAN-Gateway Facility.
- Report the message to the system administrator.

System Administrator Action:

- Check that the LAN-Gateway PC is operating and that the LAN-Gateway Facility is initialized.
- Verify that the Remote Facility dialed the correct telephone number for the LAN-Gateway.
- Check that the communication lines and equipment are operational.
- Manually dial the LAN-Gateway Facility modem number and verify that the modem answers and that an answer tone is heard.
- Run diagnostic tests on the asynchronous adapter, the communication equipment, and other equipment as appropriate.
- Request that the telephone service representative or ROLM CBX system administrator run tests on the communication line.

There is a communication equipment failure.

Remote User Action:

- Check your equipment: telephone line, modem, PC, and cables.

System Administrator Action:

- None.

Notify the ROLM CBX system administrator that there is no ROLM CBX response.

Remote User Action:

- Verify that the Remote Facility communication equipment and lines are operational.
- Report the message to the system administrator.

System Administrator Action:

- Verify that the LAN-Gateway Facility communication equipment and lines are operational.
- Notify the ROLM CBX system administrator of the problem.

The LAN-Gateway telephone line is busy.

The telephone call cannot be placed now because all trunks are busy.

ROLM CBX II modem pooling resources are not available.

Remote User Action:

- Retry the connection to the same LAN-Gateway.
- Try connecting to another LAN-Gateway.

System Administrator Action:

- Verify that the LAN-Gateway telephone equipment and modem pooling resources (if used) are operating normally.

The connection attempt time limit has been exceeded.

Remote User Action:

- Try connecting to another LAN-Gateway on the same LAN.
- Report the message to the system administrator.

System Administrator Action:

- Verify that configuration and security file data are correct. If you make changes, restart the PC using DOS, and reinitialize the Facility to make the changes effective.
- Verify that the LAN-Gateway Facility PC, communication equipment, and LAN are operational.

Note: *This message is usually caused by an invalid dial-back telephone number, ROLM CBX access class assignment, ROLM Datagroup name, or ROLM Dataline number in the LAN-Gateway security file.*

The connection attempt has been terminated by the user.

Remote User Action:

- If you accidentally pressed Esc, retry connecting.

System Administrator Action:

- None.

A response received from the LAN-Gateway was not valid.

The communication modem carrier was lost.

Remote User Action:

- Retry the connection using the valid telephone number for the LAN-Gateway.
- Retry the connection to another LAN-Gateway on the same LAN.
- Report the message to the system administrator.

System Administrator Action:

- Verify that the LAN-Gateway PC and the LAN are operating correctly.
- Run diagnostics for the communication equipment and PC, if necessary.

Note: *This message is usually caused by a connection being made to a computer that is not a LAN-Gateway Facility PC. The response received (or lack of a response) was not recognized by the Facility as a valid one. The results are messages that are unknown to the Remote Facility.*

Problems Encountered after Making a Connection

Problems encountered after making a connection result in **The Connection has been terminated.** message in a window at the Remote Facility PC. The window also contains another message that identifies the reason for the terminated connection.

Possible error messages that can appear in the window are listed on the following pages, along with corrective remote user and system administrator actions.

The Communication Modem Carrier has been lost.

Remote User Action:

- Try reconnecting to the same LAN-Gateway, in case you had a noisy telephone line.
- Check the physical connections between the PC, modem, and telephone line.
- Verify that the telephone line is operational by making a call to a valid external number.
- Try connecting to another LAN-Gateway on the same LAN, in case there is a port problem at the LAN-Gateway Facility.
- Run diagnostics on your modem and other equipment as appropriate.
- Report the message to the system administrator.

System Administrator Action:

- Check the physical connections between the LAN PC, modem, and telephone line.
- Run diagnostics on your modem and communication equipment.
- Notify the telephone service representative or ROLM CBX system administrator of the problem.

The connection has been dropped because of inactivity.

Remote User Action:

- Contact the system administrator if this message appears frequently.

System Administrator Action:

- Check that the inactivity timeout, defined in the LAN-Gateway Facility configuration file, meets the remote users' needs, and change it, if necessary. If you change it, restart the PC using DOS, and reinitialize the Facility to make the change effective.

Excessive communication errors have been received.

Remote User Action:

- Retry the connection to get a less noisy telephone line.
- Try connecting to another LAN-Gateway on the same LAN.
- Report the message to the system administrator.

System Administrator Action:

- Request that the telephone service representative or ROLM CBX system administrator run tests on the communication line.

Note: *This error could be caused by a connection being made using a ROLM CBX when the communication port speeds are defined differently for the Remote Facility and the LAN-Gateway Facility.*

The command that was received is not A NETBIOS API command.

Remote User Action:

- This message indicates an invalid application problem. Report the message to the system administrator.

System Administrator Action:

- Verify that the NETBIOS programs are operating correctly.
- Review "Special NETBIOS Command Handling" on page C-7 for information on NETBIOS commands when used with the Facility.
- Assist the remote user with the application problem.

Appendix A. Related Publications

This appendix lists related publications that provide information about the hardware and software that may be necessary to run the Facility.

IBM Publications

IBM PC DOS

- IBM Personal Computer *Disk Operating System (DOS) 3.1 Technical Reference Manual*
- IBM Personal Computer *Disk Operating System (DOS) 3.2 Technical Reference Manual.*

IBM PC Network

- *IBM PC Network Technical Reference*
- *IBM Personal Computer Seminar Recordings Volume 2, Number 5*, G320-9313.

IBM Token-Ring Network

- *IBM Token-Ring Network PC Adapter Guide to Operations*, SA27-3710
- *IBM Token-Ring Network NETBIOS User's Guide*, SC30-3392
- *IBM Token-Ring Network Problem Determination Guide*, SY27-0280
- *IBM Token-Ring Network PC Adapter Technical Reference*, SC30-3383
- *IBM Token-Ring Network PC Adapter Hardware, Maintenance, and Service*, SC30-3384.

IBM PC Local Area Network Program

- *IBM PC Local Area Network Program User's Guide.*

IBM Asynchronous Communications Server Program

- *IBM Asynchronous Communications Server Program Installation and Configuration Guide.*

ROLM Publications

ROLM CBX II 8000

- *ROLM Data Communications Feature System Administrator's Guide*, ROLM Stock Number 300325
- *ROLM Data Communications Feature User's Guide*, ROLM Stock Number 300326
- *ROLM Data Communications System Service Manual*, ROLM Stock Number 300259.

ROLM CBX II 9000

- *ROLM CBX II 9000 Data Communications Installation Guide*, ROLM Stock Number 430051
- *ROLM CBX II 9000 System Data Communications Feature System Administrator's Guide*, ROLM Stock Number 300324
- *ROLM CBX II 9000 System Data Communications Feature System Service Manual*, ROLM Stock Number 300322
- *ROLM CBX II 9000 System Data Communications Feature User's Guide*, ROLM Stock Number 300323.

Juniper II

- *Juniper II User's Manual*, ROLM Stock Number 263007
- *Juniper II Contact Manual*, ROLM Stock Number 263019.

Other Related Publications

- Your modem's user guide
- Other documentation necessary for the use of your equipment.

Appendix B. Required Programs and Equipment

This appendix lists required program products and equipment for the Remote Facility and the LAN-Gateway Facility separately. Before you install either Facility, make sure you have the required programs and equipment.

For the Remote Facility

Required program product:

- IBM Personal Computer Disk Operating System (DOS) 3.1 or later.

Required equipment:

- Processor. One of the following IBM Personal Computer products is required:
  - IBM PC 5150
  - IBM PC XT 5160 (including Model 286)
  - IBM Portable PC
  - IBM Personal Computer AT 5170
  - IBM Personal Computer *Convertible* 5140.
- Processor storage. The following are minimum storage requirements:
  - 100K bytes for the Facility
  - 37K bytes for DOS 3.1 or 45K bytes for DOS 3.2
  - Sufficient memory to run your other user application programs.

Notes:

1. *This list does not include the 31K bytes of storage required to run IBM PC Local Area Network Program Redirector.*
2. *If you are using Juniper II, you will need an additional 132K bytes of storage for the ROLM software.*

- Diskette drive supported by IBM PC DOS:
  - For installation, an IBM 5-1/4 inch double-sided diskette drive or an IBM 3-1/2 inch diskette drive.
- Program-loading storage. For program loading, one of the following with 225K bytes of storage is required:
  - IBM diskette drive supported by IBM PC DOS
  - IBM hard disk supported by IBM PC DOS.
- Display:
  - IBM PC Monochrome Display and IBM Monochrome Display and Printer Adapter, or their equivalent
  - IBM Color Display and IBM Color/Graphics Monitor Adapter, or their equivalent, operating in 80-character text mode.
- Printer. Access to an IBM PC with attached printer to print the softpub guide.
- Asynchronous communication hardware. One of the following is required:
  - An IBM Asynchronous Communications Adapter (for the IBM PC or PC XT) or an IBM Serial/Parallel Adapter (for the IBM Personal Computer *Convertible*, the IBM Personal Computer AT, or the IBM Personal Computer XT Model 286)

    The adapter is configured as either COM1 or COM2 with an EIA 232C cable attached to one of the following:
    - 1200 bps or 2400 bps modem operating in Attention command protocol mode attached to an analog telephone line of a ROLM CBX, a PBX, or the PSN
    - Manual-dial modem (non-programmable)
    - ROLM Data Terminal Interface (DTI) module attached to a Data Line Interface (DLI) of a ROLM CBX II
    - ROLMphone containing a Data Communications Module (DCM) that is attached to a ROLMphone Interface (RPI) of a ROLM CBX II.

    - 1200 bps or 2400 bps internal Attention command protocol modem configured as either COM1 or COM2 and attached to an analog telephone line of a ROLM CBX, a PBX, or the PSN
    - ROLM Integrated Personal Computer Interface (IPCI) card configured as either COM1 or COM2 and attached to a Data Line Interface (DLI) of a ROLM CBX II
    - ROLM Juniper II CBX Interface card configured as either COM1 or COM2 and attached to a ROLM CBX II
    - 1200 bps IBM Personal Computer Convertible internal modem configured as COM1 and attached to an analog telephone line of a ROLM CBX, a PBX, or the PSN.

For the LAN-Gateway Facility

Required program products:

- IBM Personal Computer Disk Operating System (DOS) 3.1 or later version as required for your LAN
- IBM Token-Ring Network NETBIOS Program (if IBM Token-Ring Network Adapter is used).

Required equipment:

- Processor. One of the following IBM Personal Computer products is required:
  - IBM PC 5150
  - IBM PC XT 5160 (including Model 286)
  - IBM Personal Computer AT 5170.
- Processor storage. The following are minimum storage requirements:
  - 100K bytes for the Facility
  - 37K bytes for DOS 3.1 or 45K bytes for DOS 3.2
  - 66K bytes for the LAN-Gateway Facility buffers to support two ports

    Note: *From 4K-512K bytes may be specified. This is based on the number of NCBs defined in the LAN-Gateway configuration (default of 8) multiplied by the buffer size specified by the user*

application (for the IBM PC Local Area Network Program, this is the RQB buffer for which the default is 8K bytes) plus 250 bytes per NCB defined.

For example:
8 NCBs x 8K bytes (application buffer size)
+ 8 NCBs x 250 bytes
= 66K bytes.

- 53K bytes for IBM Token-Ring Network Adapter NETBIOS interface code if that adapter is used (46K bytes for the IBM Token-Ring Network NETBIOS Program and 7K bytes for the IBM Token-Ring Adapter Handler).

- Diskette drive supported by IBM PC DOS:
  - For installation, an IBM 5-1/4 inch double-sided diskette drive or an IBM 3-1/2 inch diskette drive.
- Program-loading storage. For program loading, one of the following with at least 240K bytes of storage is required:
  - IBM diskette drive supported by IBM PC DOS
  - IBM hard file supported by IBM PC DOS
  - IBM PC Local Area Network Program file server accessible through the LAN.
- LAN adapter. One of the following is required:
  - IBM PC Network Adapter connected through the appropriate IBM PC Network components to other IBM PCs of the LAN
  - IBM Token-Ring Network Adapter connected through the appropriate components to other IBM PCs of the LAN.
- Display. One of the following is required:
  - IBM PC Monochrome Display and IBM Monochrome Display and Printer Adapter, or their equivalent
  - IBM Color Display and IBM Color/Graphics Monitor Adapter, or their equivalent, operating in 80-character text mode.
- Printer. Access to an IBM PC with attached printer to print the softpub guide.

- Asynchronous communication hardware. One or two of the following is required (if two are provided, then each must present the same interface appearance to the LAN-Gateway Facility):
  - An IBM Asynchronous Communications Adapter (for the IBM PC or PC XT) or an IBM Serial/Parallel Adapter (for the IBM Personal Computer *Convertible*, the IBM Personal Computer AT, or the IBM Personal Computer XT Model 286)

    The adapter is configured as either COM1 or COM2 with an EIA 232C cable attached to one of the following:
    - 1200 bps or 2400 bps modem operating in Attention command protocol mode attached to an analog telephone line of a ROLM CBX, a PBX, or the PSN

      If two IBM Asynchronous Adapters are used by the LAN-Gateway Facility, then the two modems connected to these ports must be of an identical type.
    - Manual-dial modem (non-programmable)
    - ROLM Data Terminal Interface (DTI) module attached to a Data Line Interface (DLI) of a ROLM CBX II

      Note: *All LAN-Gateway Facilities within a particular ROLM CBX Datagroup must be on the same LAN and have the same LAN-Gateway names. This assures that the Remote Facility can get the same connection through all the LAN-Gateway Facilities in a ROLM CBX Datagroup. Otherwise, the Dataline number (and not the ROLM CBX Datagroup name) would be required to access LAN-Gateway Facilities.*
    - ROLMphone containing a Data Communications Module (DCM) that is attached to a ROLMphone Interface (RPI) of a ROLM CBX II.
  - 1200 bps or 2400 bps internal Attention command set modem configured as either COM1 or COM2 and attached to an analog telephone line of a ROLM CBX, a PBX, or the PSN
  - ROLM Integrated Personal Computer Interface (IPCI or IPCI/AT) card configured as either COM1 or COM2 and attached to a Data Line Interface (DLI) of a ROLM CBX II.

Special Considerations when Using a ROLM CBX II

Note the following considerations when configuring the ROLM CBX II datalines:

- Do not configure the dataline for a serial call. See the appropriate references for the program level of your ROLM CBX II for suggestions.
- Give the dataline permission to originate, answer, and dial-out.
- Configure the dataline so that it is not automatically placed in test mode by the ROLM CBX.
- Set the line speed range at 1200 to 19200 bps as appropriate for your IBM PC (see performance information in Appendix C, "Performance and Compatibility" on page C-1).
- Check that the access classes assigned to the datalines associated with the modem pool agree with those of the datalines that will be using the modem pool.
- When using DCMs as the interface between the Facility and the ROLM CBX, configure the DCM so that the Data Terminal Ready (DTR) signal is used to start the Interactive Call Setup sequence. On the ROLM CBX II 8000, you can accomplish this by configuring the Auto Request for Service parameter to 'Yes' and the Auto-Baud parameter to 'No'. You must set forced DTR to OFF.
- If DTIs are used, the system administrator for the LAN-Gateway Facility must ensure that the internal switches in and on the DTI are set correctly.

  Set the rear external switch to AUTO.
  Set the S3 internal switch to TERM.
  Set the S1 switch bank as follows:

  1 = ON
  2 = ON
  3 = ON
  4 = OFF
  5 = ON
  6 = ON

- The ROLM CBX system administrator should check the following features for calls made through the outbound modem pool:
  - The timeout value is between 50 and 80 seconds.
  - The No Carrier Disconnection feature is active.
  - Modem modulation protocol (for example, Bell 103 or Bell 212) is consistent with the line speeds or baud rate at which modems are expected to operate.
  - Modem switches are set to HIGH or LOW, according to the line speeds or baud rate designated for that modem.
  - The software configuration of the modem is consistent with the switch settings on the hardware.

Special Considerations when Using Attention Command Set Modems

You can use an Attention command set compatible modem attached to a non-ROLM PBX, the PSN, or a ROLM CBX II analog line.

Note the following special considerations when configuring Attention command set compatible modems for the Facility:

- The modem must support the Data Terminal Ready (DTR) line. Dropping DTR causes the line to be disconnected.
- The modem must maintain the Clear To Send (CTS) line in an active state at all times.
- The modem must operate in asynchronous mode using standard ASCII characters.
- The modem must support the following commands and produce the following responses:

  ';' Remain in dial mode.

  A Answer command. Responses are as follows:

  CONNECT 1200
  CONNECT 2400
  NO CARRIER

DT and DP Tone or pulse dialing. Responses are same as for the answer command plus the following parameters:

RINGING
NO ANSWER
NO DIALTONE
BUSY

E0 Command characters are not echoed.

H0 On hook command.

Q1 and Q0 Send result codes or inhibit result codes.

S3? Query contents of 'S3' register. Response after initialization should be '030'.

V1 Verbal result codes.

X1 Extended result codes for IBM Personal Computer modems.

X4 Extended result codes for 2400 bps Attention command set modem.

- The modem must support the following parameters for S registers:

S0 = 0 No auto-answer.

S3 = 13 Normal carriage return character.

S4 = 22 Special line feed character.

S5 = 255 No backspace.

- The following parameters for S registers are recommended:

S7 < 30 Carrier wait time less than 30 seconds.

S2 = 255 No escape to command state.

Modem Switch Configurations

To enable the following commands, the modem switch configurations must be set as:

- Hang up if DTR is dropped.
- No auto-answer.
- Carrier detect should follow line conditions.
- Attention command set recognition enabled.
- Operate in asynchronous mode.

To enable the following commands, the following modem switch configurations are recommended:

- Word result codes by default.
- Result codes sent by default.
- Characters are not echoed.

Special Considerations when Using Manual Dial Modems

You can use a manual dial (non-programmable) modem attached to a non-ROLM PBX, the PSN, or a ROLM CBX II analog line.

Note the following special considerations when configuring these modems for use with the Facility:

- The modem must supply the RING indicator on pin 22 of the communication adapter EIA 232C connector if the modem is used on the LAN-Gateway, or on the Remote Facility if dial-back will be used.
- The modem must have an Auto-Answer mode if it will be used on the LAN-Gateway. The modem should not answer any incoming calls unless DTR is active.
- The modem must disconnect the line when DTR is dropped.

Appendix C. Performance and Compatibility

This appendix provides information about licensed programs and program products that are compatible with the IBM Remote NETBIOS Access Facility Program. It outlines coexistence and performance considerations, as well as restrictions on the use of the IBM PC in which the LAN-Gateway Facility runs.

Coexistence Considerations

The Facility can coexist with many different IBM PC DOS applications. If the DOS application can run on DOS version 3.1 or 3.2 or later, the following factors determine coexistence:

- IBM PC processor loading.
- IBM PC storage requirements.
- Card slot and power supply limitations.
- Exclusive use of the asynchronous adapter by the Facility (except when sharing ports with the IBM Asynchronous Communications Server Program).
- Adapter card characteristics that affect coexistence with Facility-required adapters. See Appendix B.
- Well-behaved use of the IBM PC timer.

  Note: *IBM Personal Telephone Manager Program (if used) must be loaded after the Remote and LAN-Gateway Facilities.*
- IBM PC processor instruction processing that inhibits interrupts of a sufficient duration to produce buffer overruns on the asynchronous communication lines.
- No system reset with active Facility connections.
- The IBM Asynchronous Communications Server Program (if used with the LAN-Gateway Facility) must be initialized after the LANRESET program and before the LAN-Gateway Facility.

- The IBM PC Local Area Network Program, if used with the LAN-Gateway Facility, must be initialized before the LAN-Gateway Facility software.
- The IBM PC Local Area Network Program, if used in the Remote Facility, must be loaded after the Remote Facility connects to the LAN-Gateway Facility.

LAN Server Functions that Coexist with the Facility

- The Redirector configuration of the IBM PC Local Area Network Program

  Note: *The Facility cannot coexist in the same PC with the IBM PC Local Area Network Program when that program is performing Receiver, Messenger, File Server, and/or Print Server functions.*

- IBM Asynchronous Communications Server Program

  The LAN-Gateway Facility can work in conjunction with the IBM Asynchronous Communications Server Program to share asynchronous ports on the same PC.

Running the Communications Server Program with the Facility

The IBM Asynchronous Communications Server Program and the IBM Remote NETBIOS Access Facility Program can run in the same LAN-Gateway Facility PC and share the use of the same COMM ports and equipment. There are, however, the following restrictions:

- **Before using the Facility with the IBM Asynchronous Communications Server Program, check with your dealer to make sure that you have all the required program updates for the server program (or other programs that you might be using).**
- The IBM Asynchronous Communications Server Program must be installed first because it controls COMM port use. The IBM Remote NETBIOS Access Facility Program must be installed immediately after the IBM Asynchronous Communications Server Program.

- If both the IBM Asynchronous Communications Server Program and the IBM Remote NETBIOS Access Facility Program share a port, then their incoming call parameters must be identical. Otherwise, the completion of a call to the Facility causes the Facility's incoming call parameters to override and replace those of the IBM Asynchronous Communications Server Program.
- The PC and LAN resources must be sufficient to handle the requirements of running both the IBM Asynchronous Communications Server Program and the IBM Remote NETBIOS Access Facility Program.
- In order to change the LAN adapter parameters (maximum sessions and maximum NCBs) to those defined in the LAN-Gateway Facility configuration file, it is necessary to run the LANRESET program before the IBM Asynchronous Communications Server Program is loaded. This is because the LAN-Gateway Facility cannot modify the LAN adapter parameters after the IBM Asynchronous Communications Server Program is installed.
- Do not use a network name with the prefix ABDORIA when the IBM Asynchronous Communications Server Program and the LAN-Gateway Facility share a port. This prefix, along with random characters, is used to create a temporary network name that will be used internally by these programs.

Installing the Communications Server Program in the LAN-Gateway PC

To install both the IBM Asynchronous Communications Server Program and the IBM Remote NETBIOS Access Facility Program in the same PC, you must follow a different installation procedure:

1. Install and configure the LAN-Gateway Facility by entering the GATEINST and CONFIG commands as you normally would.
2. Enter the **LANRESET <d:> <path> <name>** command, where:

<d:>	is the drive containing the LAN-Gateway configuration file, if not the default drive.
<path>	is the optional directory for the LAN-Gateway configuration file.
<name>	is an optional, alphanumeric name for the LAN-Gateway configuration file.

The LANRESET command resets the LAN adapter using the following information from the LAN-Gateway Facility configuration file:

- Number of network sessions
- Number of network control blocks (NCBs).

3. Initialize the IBM Asynchronous Communications Server Program. See the *IBM Asynchronous Communications Server Program Installation and Configuration Guide* for instructions.
4. Enter the GATESTRT command as you normally would to initialize the IBM Remote NETBIOS Access Facility Program.

Running the IBM PC LAN Program with the Facility

- If the connection is broken between the Remote Facility and the LAN-Gateway Facility, it will be necessary to restart the PC using DOS, reload and initialize the Remote Facility, and then reload and initialize the IBM PC Local Area Network Program. Services such as print and file server access will have to be restarted.
- The IBM PC must not be reset or restarted while there are active Facility connections. If the connection between the Remote and LAN-Gateway Facilities is broken, any use of the Redirector function of the IBM PC Local Area Network Program will cause the **NET810: Unexpected network error.** message to display at the Remote Facility.

  If this message displays, restart the PC, reinitialize the Facility, and restart the IBM PC Local Area Network Program.
- The IBM PC Local Area Network Program cannot be used with the Remote Facility when the Remote Facility is configured for logical address '1'. The Remote Facility must be configured as logical address '0', and this address must not conflict with any actual LAN adapter card installed with that address.
- The NCB buffer size (defined as the Internal Network buffer size ÷ number of NCBs) must be larger than the data buffer used by the application to receive data sent during file transfers. In the case of the IBM PC Local Area Network Program, this buffer area is the RQB buffer for which the default size is 8K bytes.

  As long as the LAN-Gateway Facility NCB buffer is larger than the IBM PC Local Area Network Program RQB buffer, there is no limit to the file size that can be transmitted, although slow line speeds might make very large data transfers impractical.

  If an attempt is made to transfer a file the size of which exceeds the size of the LAN-Gateway Facility NCB buffer, and the NCB buffer is smaller than the IBM PC Local Area Network Program RQB buffer, then one or both of the following error messages will display:

  NET807: Network Hardware Adapter Error

  NET805: Network device no longer exists

  If either of these messages displays, reconfigure the LAN-Gateway Facility so that the NCB buffer size (Internal Network Buffer ÷ number of NCBs) is greater than the size of the LAN applications buffer. In this case, it is the RQB buffer size of the IBM PC Local Area Network Program.
- Neither the Remote nor the LAN-Gateway Facility can function as a server to share its disks, directories, and printers with other LAN terminals.

Restrictions on the Use of the PC Running the Facility

The IBM PC must not be powered off or restarted while there are active LAN-Gateway Facility connections. (You can determine Facility activity by viewing the appropriate modem status indicators, if available.)

System Administrator Notes

- "Call waiting" options, and other switching equipment options that inject tones onto the telephone lines, should not be used with the Facility. If a "call waiting" tone is sensed by the modem, then the active connection will be dropped, and the connection will be given to the next caller.

- ROLM CBX Datagroup names defined for dial-back use should refer only to individual line definitions. For example, "FRED" is a valid Datagroup name for extension 4-3911, but "DEPTC29," referring to all ten lines for the members of Department C29, would be insufficient information when trying to dial back to a specific Remote Facility. (Remember, also, that Datagroup names must begin with an alphabetic character.)
- You should attempt to use consistent communication parameters, particularly if ROLM CBX switching systems will be used. For example, if a Remote Facility and a LAN-Gateway Facility have different line speeds, the Facility will internally modify the parameters until they match. The connection cannot be completed until the matching is finished. This matching action repeats when dial-back mode is used, and a badly mismatched environment can cause a delay of up to three minutes in completing the connection.

  Note: *This parameter-matching action could also result in a connection speed that exceeds the allowed maximum supported line speed (see "Other Performance Considerations" on page C-9). If this happens, the connection may be terminated and the message* **Excessive communication errors have been received.** *may be displayed (see page 4-13).*
- LAN-Gateway Facility configuration file entries for the "maximum number of sessions" and the "maximum number of NCBs" are initially set based on using both port 1 and port 2. The number of NCBs available to a remote user is equal to the "maximum number of NCBs" divided by the number of ports being used.

  If only one port will be used in the LAN-Gateway, then these values could be reduced, which may improve overall performance. (See the planning and performance section in the IBM PC Local Area Network Program documentation.)
- If the IBM PC Local Area Network Program will be used in the LAN-Gateway Facility, then it must be initialized before the LAN-Gateway Facility, and must be configured with sufficient resources (number of sessions, number of NCBs, and so on) for BOTH the LAN program and the LAN-Gateway Facility.

Special NETBIOS Command Handling

Certain NETBIOS commands are not limited in scope to a single user of a NETBIOS interface. However, the LAN-Gateway must share the NETBIOS between two asynchronous ports as well as with a user application in the same IBM PC. Therefore, the LAN-Gateway must provide special processing for the following NETBIOS commands:

ADAPTER STATUS

Returns general information about the network adapter. When this command is processed, the Facility only returns those names from the local name table that belong to the remote device. The remaining adapter status information, including the network adapter's permanent node ID, is returned as is. However, the adapter resource statistics may not contain information meaningful to the remote device.

ADD GROUP NAME

Allows an application to register a name that may also be defined on other NETBIOS interfaces. Note, however, that two remote devices/applications with the same name (individual or group) cannot access the LAN-Gateway Facility simultaneously.

If, for example, the LAN-Gateway Facility processes the ADD GROUP NAME command for a remote device connected to its NETBIOS interface, and another device/application using that NETBIOS is already using the same group name, the LAN-Gateway Facility returns a **Name in use on remote adapter** return code (X'16').

Note: *The IBM PC Local Area Network Program does not use group names.*

CHAIN SEND

Concatenates data in two buffers to send as a single message. The total length of the two buffers specified by the application cannot be greater than the internal network buffer in the configuration file divided by the number of NCBs defined (or 64K bytes, whichever is less).

RECEIVE ANY (without specific local name)

Normally, when RECEIVE ANY is processed without specifying a local name, the PC receives data sent on any session on the NETBIOS interface that does not already have a RECEIVE or RECEIVE ANY (with specific name) outstanding. When RECEIVE ANY is used without a local name with the Facility, however, the Facility rejects this command and returns an **Illegal name number** return code (X'13').

RECEIVE DATAGRAM (without specific local name)

Normally, when RECEIVE DATAGRAM is processed without specifying a local name, the PC receives any datagram sent on the LAN. When RECEIVE DATAGRAM is processed without a local name with the Facility, however, the Facility rejects this command and returns an **Illegal name number** return code (X'13').

RESET

If the Facility issues RESET for a remote device directly on its NETBIOS interface, all other devices/applications using that NETBIOS interface could be disrupted. To prevent this, the Facility performs a selective reset by:

- Canceling all outstanding network control blocks (NCBs) from the remote device
- Terminating each of the remote device's sessions, one at a time, using the HANGUP command
- Deregistering each of the remote device's names, one at a time, using the DELETE NAME command.

The maximum number of sessions and outstanding NCBs specified in RESET cannot be changed.

SESSION STATUS

Returns information on outstanding datagram commands and on sessions. The sessions can be for a specific local name or for the entire NETBIOS interface. If a local name was not specified in the command, the Remote Facility only returns those sessions belonging to the remote device. The remaining status information is returned as is.

UNLINK

Is not supported. (A valid return code of '00' will be returned, but the UNLINK command will not have been processed.)

Other Performance Considerations

- Maximum port speeds configured for IBM PC or IBM PC XT:
  - Two 2400 bps ports when using modems
  - One 9600 bps port or two 4800 bps ports when using ROLM DataCom Interfaces.
- Maximum port speeds configured for IBM Personal Computer AT or IBM Personal Computer XT Model 286:
  - Two 2400 bps ports when using modems
  - One 19,200 bps port (IPCI/AT or Juniper II only) or two 9600 bps ports when using ROLM DataCom Interfaces.

Appendix D. Configuration Information Checklists

This appendix contains checklists that you photocopy and fill out before entering information into the Facility's Configuration Utility program. The numbered prompts and options on the checklists are in the same order as the prompts displayed on the configuration screens.

Use the following checklists as you read Chapter 2:

- Checklists 1 through 5 to configure the Remote Facility
- Checklists 6 through 9 to configure the LAN-Gateway Facility
- Checklists 10 and 11 to configure the LAN-Gateway Facility security file.

The IBM Remote NETBIOS Access Facility Program comes with predefined default configuration settings—shown in bold on the checklists. Change only the settings that you need to change for your particular Facility configuration.

Notes:

1. *Some of the options displayed on the configuration menus are dependent upon your selections for previous menus, and may not appear on your screen.*
2. *Depending on your system setup, some checklists may not apply.*

Instructions

1. If you change the default LAN-Gateway Facility, Remote Facility, or security file configuration filenames or paths, fill in the new name at the top of the checklist.
2. Fill in information, as appropriate, in the spaces provided on the checklists. Check off the numbered items and options in each checklist as you complete them on the configuration screen.

Checklist 1: System Definition Data

Remote Facility Configuration File

New Filename:

☐ 1. Data Communication Type

__ 1. **Analog Modem**
__ 2. ROLM CBX DataCom Interface

☐ 2. IBM Personal Computer Model

__ 1. **IBM Personal Computer**
IBM Personal Computer XT
IBM Portable Personal Computer
__ 2. IBM Personal Computer AT
IBM Personal Computer XT Model 286
__ 3. IBM PC Convertible

☐ 3. LAN Logical Address

__ 1. **LAN Logical Address 0**
__ 2. LAN Logical Address 1

☐ 4. Startup Key Sequence Definition

(Default is **A-L**)

☐ 5. Async Port

__ 1. **Async Port Com1**
__ 2. Async Port Com2

Checklist 2: System Communication Data — Modem

Remote Facility Configuration File

☐ 1. Modem Type

__ 1. **Automatic Dial Modem**
__ 2. Manual Dial Modem
__ 3. IBM PC Convertible Internal Modem (if applicable)

☐ 2. Dialing Method

__ 1. **DTMF Dialing** (Tone)
__ 2. Pulse Dialing

☐ 3. Port Speed

__ 1. **1200 bps**
__ 2. 2400 bps

☐ 4. Number of Data Bits per Character

__ 1. **7 Data Bits per Character**
__ 2. 8 Data Bits per Character

☐ 5. Parity Used

__ 1. **ODD Parity**
__ 2. EVEN Parity
__ 3. NONE (Required with 8 Data Bits per Character)

☐ 6. Number of Stop Bits

__ 1. **1 Stop Bit** (Required with 8 Data Bits per Character)
__ 2. 2 Stop Bits

Checklist 3: System Communication Data — ROLM CBX DataCom Interface

Remote Facility Configuration File

☐ 1. ROLM CBX Model

__ **1. ROLM CBX II 8000**
__ 2. ROLM CBX II 9000

☐ 2. Attachment Hardware

__ **1. ROLM DTI and Async Card**
__ 2. ROLM DCM and Async Card
__ 3. ROLM IPCI Card (if applicable)
__ 4. ROLM Juniper II (if applicable)

☐ 3. Port Speed

__ **1. 1200 bps**
__ 2. 2400 bps
__ 3. 4800 bps
__ 4. 9600 bps (if applicable)
__ 5. 19200 bps (if applicable)

☐ 4. Number of Data Bits per Character

__ **1. 7 Data Bits per Character**
__ 2. 8 Data Bits per Character

☐ 5. Parity Used

__ **1. ODD Parity**
__ 2. EVEN Parity
__ 3. NONE (Required with 8 Data Bits per Character)

☐ 6. Number of Stop Bits

__ **1. 1 Stop Bit** (Required with 8 Data Bits per Character)
__ 2. 2 Stop Bits

☐ 7. DataCom Initialization Account Code[1]

_ _ _ _

[1] *ROLM CBX 8000 only. Required if ROLM CBX system administrator says it is required.*

Checklist 4: LAN-Gateway Access Table — Modem (photocopy one for each LAN)

Remote Facility Configuration File

☐ 1. LAN-Gateway Name

_ _ _ _ _ _ _ _ _ _ _ _ _ _ _ _

☐ 2. LAN-Gateway User ID/Password

_ _ _ _ _ _ _ _ _ _ _ _ _ _ _ _

☐ 3. Telephone Number

_ _ _ _ _ _ _ _ _ _ _ _ _ _ _ _ _ _ _ _

_ _ _ _ _ _ _ _ _ _ _ _ _ _ _ _ _ _ _ _

Notes:

1. *If you type an asterisk (*) for options 2 or 3 above, the Remote Facility prompts you for the information when the connection is attempted.*
2. *If you are using an IBM Personal Computer Convertible with an internal modem, the maximum length of the Telephone Number field is 32 characters.*

Checklist 5: LAN-Gateway Access Table — ROLM CBX DataCom Interface (photocopy one for each LAN-Gateway Facility)

Remote Facility Configuration File

☐ 1. LAN-Gateway Name

☐ 2. LAN-Gateway User ID/Password

☐ 3. System Access Type

__ ROLM CBX Datagroup
OR
__ ROLM CBX Dataline Number

☐ 4. ROLM CBX Datagroup Name

OR
ROLM CBX Dataline Number or External Telephone Number

☐ 5. ROLM CBX Datagroup Password (if used)

(4 characters for CBX II 8000; 6 characters for CBX II 9000)

☐ 6. ROLM CBX Dataline Account Code (if used)

(CBX II 8000 only)

Notes:

1. *If you type an asterisk (*) for options 2, 4, 5, or 6 above, the Facility prompts you for the information when the connection is attempted.*
2. *The ROLM CBX Datagroup Name must begin with an alphabetic character.*

Checklist 6: System Definition Data

LAN-Gateway Facility Configuration File

New Filename:

☐ 1. LAN-Gateway Name

☐ 2. Data Communication Type

__ **1. Analog Modem**
__ 2. ROLM CBX DataCom Interface

☐ 3. IBM Personal Computer Model

__ **1. IBM Personal Computer**
IBM Personal Computer XT
__ 2. IBM Personal Computer AT
IBM Personal Computer XT Model 286

☐ 4. COMM Port(s) to be used

__ 1. Async Port COM1
__ 2. Async Port COM2
__ **3. Both COM1 and COM2**

☐ 5. COMM Port(s) to be shared with IBM Async Communications Server (if applicable)

__ 1. Async COM1
__ 2. Async COM2
__ 3. Both COM1 and COM2
__ **4. No ports shared.**

☐ 6. Inactivity Timeout (seconds)

(0 - 3600 seconds)

☐ 7. Initialization Delay (seconds)

(0 - 999 seconds)

Checklist 7: System Communication Data — Modem

LAN-Gateway Facility Configuration File

☐ 1. Modem Type

__ **1. Automatic Dial Modem**
__ 2. Manual Dial Modem

☐ 2. Dialing Method

__ **1. DTMF Dialing** (Tone)
__ 2. Pulse Dialing

☐ 3. Port Speed

__ **1. 1200 bps**
__ 2. 2400 bps

☐ 4. Number of Data Bits per Character

__ **1. 7 Data Bits per Character**
__ 2. 8 Data Bits per Character

☐ 5. Parity Used

__ **1. ODD Parity**
__ 2. EVEN Parity
__ 3. NONE (Required with 8 Data Bits per Character)

☐ 6. Number of Stop Bits

__ **1. 1 Stop Bit** (Required with 8 Data Bits per Character)
__ 2. 2 Stop Bits

Checklist 8: System Communication Data — ROLM CBX DataCom Interface

LAN-Gateway Facility Configuration File

☐ 1. ROLM CBX Model

__ **1. ROLM CBX II 8000**
__ 2. ROLM CBX II 9000

☐ 2. Attachment Hardware

__ **1. ROLM DTI and Async Card**
__ 2. ROLM DCM and Async Card
__ 3. ROLM IPCI Card

☐ 3. Port Speed

__ **1. 1200 bps**
__ 2. 2400 bps
__ 3. 4800 bps
__ 4. 9600 bps (if applicable)
__ 5. 19200 bps (if applicable)

☐ 4. Number of Data Bits per Character

__ **1. 7 Data Bits per Character**
__ 2. 8 Data Bits per Character

☐ 5. Parity Used

__ **1. ODD Parity**
__ 2. EVEN Parity
__ 3. NONE (Required with 8 Data Bits per Character)

☐ 6. Number of Stop Bits

__ **1. 1 Stop Bit** (Required with 8 Data Bits per Character)
__ 2. 2 Stop Bits

☐ 7. DataCom Initialization Account Code[1]

└┴┴┴┘

[1] *ROLM CBX 8000 only. Required if ROLM CBX system administrator says it is required.*

Number	Message

EL21 **The PC model specified is not valid.**

Change the PC model specified in the configuration file to represent the actual unit used. Then reenter the initialize command.

EL22 **File I/O error loading the LAN-Gateway configuration file.**

Make sure that the specified drive and path are correct, then reenter the initialize command. If the error continues, repair or replace the disk or diskette as appropriate.

EL23 **File I/O error loading the LAN-Gateway security file.**

Make sure that the specified drive and path are correct, then reenter the initialize command. If the error continues, repair or replace the disk or diskette as appropriate.

EL25 **The LAN adapter is not present or not working.**

Make sure that the PC is physically connected to the LAN, that all cables and support hardware are operational, and that the LAN software is running. Then reenter the initialize command.

Note: *When using the IBM Remote NETBIOS Access Facility Program with the IBM Token-Ring Network, the IBM Token-Ring Network NETBIOS Program must be*

Number	Message

EL39 **The ROLM CBX Dataline Account Code that was used when trying to initialize the DataCom Interface was not valid.**

(ROLM CBX II 8000 only) Make sure that this account code is valid for this ROLM CBX switch by changing the initialization account code in the configuration file, as necessary. Then reinitialize the Facility.

EL40 **The ROLM CBX software level is not valid, or a required ROLM CBX update has not been applied to this system.**

The ROLM software update, referred to as the Cypress code detection patch, must be applied to this ROLM CBX switch. Contact your ROLM CBX system administrator.

EL41 **It is not possible to initialize the ROLM CBX DataCom Interface with the parameters specified in the Facility configuration file.**

Contact the ROLM CBX system administrator about parameter modification limitations, as defined within the ROLM CBX.

EL45 **A LAN application program or service has already been loaded.**

The LANRESET program senses that another LAN program was loaded before it. The LANRESET program aborted so that the program will not reset the adapter and wipe out any meaningful work that a previous program may have done.

Number	Message

ER05 **The drive/path that was specified is not valid.**

Create a new directory, if necessary; then reenter the install command using a valid drive and path.

ER07 **There is a disk/diskette file I/O error.**

Make sure that the specified drive and path are correct, then reenter the install command. If the error continues, repair or replace the disk or diskette as appropriate.

ER08 **There is not enough disk/diskette file space.**

Remove unnecessary files from the specified drive, select another drive and path, or select another diskette. Then reenter the install command.

ER09 **GATEWAY is a reserved filename that can only be used with the LAN-Gateway part of the IBM Remote NETBIOS Access Facility.**

Reenter the install command using a filename other than GATEWAY.

ER15 **The configuration file was not found.**

Reenter the initialize command using the correct drive, path, and filename for the configuration file.

ER16 **The file specified is not a valid configuration file.**

Reenter the initialize command specifying the correct drive, path, and filename for the configuration file (if not the default).

ER18 **The Network Logical Address is not valid.**

The Remote Facility PC already has a LAN adapter installed at the same address as the logical address defined for the Facility in the Remote Facility configuration file. Change the logical address in the Remote Facility configuration file. Then reenter the initialize command.

Number	Message

ER19 **Cannot locate the LAFMSGAE.MSG file.**

Verify that the Facility program files are on the default drive. Then reenter the initialize command, using the correct drive, path, and filename.

ER21 **The PC model specified is not valid.**

Change the PC model specified in the configuration file to represent the actual unit used. Then reenter the initialize command.

ER22 **File I/O error loading the remote configuration file.**

Make sure that the specified drive and path are correct, then reenter the initialize command. If the error continues, repair or replace the disk or diskette as appropriate.

ER25 **No communication adapter is installed for port 1.**

Check to see if there is a communication adapter installed for port 2. If there is, either change the configuration file or change the address of the adapter to port 1. Otherwise, install a communication adapter in port 1.

ER26 **No communication adapter is installed for port 2.**

Check to see if there is a communication adapter installed for port 1. If there is, either change the configuration file or change the address of the adapter to port 2. Otherwise, install a communication adapter in port 2.

ER27 **The IBM PC LAN Program can be used only in Redirector configuration.**

Change the IBM PC Local Area Network Program configuration to Redirector, or install the LAN-Gateway Facility on another LAN PC.

ER28 **The Remote program is already initialized.**

If you need to reinitialize the Remote Facility, terminate all processing currently running on the PC, restart your PC using DOS, and enter the initialize command.

Number Message

ER29 **The communication adapter for port 1 is not working.**

Reenter the initialize command. If the message appears again, run diagnostics for the adapter.

Try powering off the modem or ROLM CBX Interface, then power it back on and retry the command.

ER30 **The communication adapter for port 2 is not working.**

Reenter the initialize command. If the message appears again, run diagnostics for the adapter.

Try powering off the modem or ROLM CBX Interface, then power it back on and retry the command.

ER31 **The modem, ROLM CBX Interface, or adapter card on port 1 did not respond or the response received was not recognized.**

Verify that the appropriate interfaces and all associated hardware are powered on and operational, and reenter the initialize command. If the message displays again, try another interface or line, or see your hardware manual.

Try powering off the modem or ROLM CBX Interface, then power it back on and retry the command.

ER32 **The modem, ROLM CBX Interface, or adapter card on port 2 did not respond or the response received was not recognized.**

Verify that the appropriate interfaces and all associated hardware are powered on and operational, and reenter the initialize command. If the message displays again, try another interface or line, or see your hardware manual.

Try powering off the modem or ROLM CBX Interface, then power it back on and retry the command.

ER33 **Cannot initialize the ROLM CBX DataCom Interface for port 1.**

There is a ROLM CBX DataCom Interface error, or the data used to initialize the interface is not valid.

Number Message

ER34 **Cannot initialize the ROLM CBX DataCom Interface for port 2.**

There is a ROLM CBX DataCom Interface error, or the data used to initialize the interface is not valid.

ER39 **The ROLM CBX Dataline Account Code that was used when trying to initialize the DataCom Interface was not valid.**

(ROLM CBX II 8000 only) Make sure that this account code is valid for this ROLM CBX switch by changing the initialization account code in the configuration file, as necessary. Then reinitialize the facility.

ER40 **The ROLM CBX software level is not valid, or a required ROLM CBX update has not been applied to this system.**

The ROLM software update, referred to as the Cypress code detection patch, must be applied to this ROLM CBX switch. Contact your ROLM CBX system administrator.

ER41 **It is not possible to initialize the ROLM CBX DataCom Interface with the parameters specified in the Facility configuration file.**

Contact the ROLM CBX system administrator about parameter modification limitations, as defined within the ROLM CBX.

WD53 **A duplicate file name was found. Do you want to write over it? (Y or N)**

If you want to write the new Trace Table Dump file over an old one with the same name, enter Y. Otherwise, enter N, restart the Trace Table Dump Program, and reference a different Trace Table Dump file.

WD54 **The diskette is full. Insert a new formatted diskette, then press ENTER to continue.**

Remove the current diskette and insert a blank formatted diskette to continue the Trace Table Dump.

Number Message

WL30 **No communication adapter is installed for port 1.**

Check to see if there is a communication adapter installed for port 2. If there is, either change the configuration file or change the address of the adapter to port 1. Otherwise, install a communication adapter in port 1.

WL31 **No communication adapter is installed for port 2.**

Check to see if there is a communication adapter installed for port 1. If there is, either change the configuration file or change the address of the adapter to port 2. Otherwise, install a communication adapter in port 2.

WL32 **The communication adapter for port 1 is not working.**

Reenter the initialize command. If the message appears again, run diagnostics for the adapter.

WL33 **The communication adapter for port 2 is not working.**

Reenter the initialize command. If the message appears again, run diagnostics for the adapter.

WL34 **The modem, ROLM CBX Interface, or adapter card on port 1 did not respond or the response received was not recognized.**

Verify that the appropriate interfaces and all associated hardware and configuration switch settings are powered on and operational. If the message displays again, try another interface or line, or see your hardware manual.

Try powering off the modem or ROLM CBX Interface, then power it back on and retry the command.

WL35 **The modem, ROLM CBX Interface, or adapter card on port 2 did not respond or the response received was not recognized.**

Verify that the appropriate interfaces and all associated hardware and configuration switch settings are powered on and operational. If the message displays again, try another interface or line, or see your hardware manual.

Try powering off the modem or ROLM CBX Interface, then power it back on and retry the command.

Number Message

WL36 **Cannot initialize the ROLM CBX DataCom Interface for port 1.**

There is a ROLM CBX DataCom Interface error, or the data used to initialize the interface is not valid.

WL37 **Cannot initialize the ROLM CBX DataCom Interface for port 2.**

There is a ROLM CBX DataCom Interface error, or the data used to initialize the interface is not valid.

WL38 **The type of ROLM CBX defined in the configuration file may not match the actual CBX used.**

Correct the ROLM CBX type defined in the configuration file, and reinitialize the system. Contact your ROLM CBX administrator if the condition continues.

WR38 **The type of ROLM CBX defined in the configuration file may not match the actual CBX used.**

Correct the ROLM CBX type defined in the configuration file, and reinitialize the system. Contact your ROLM CBX administrator if the condition continues.

Special Return Codes

The following return codes are unique to the IBM Remote NETBIOS Access Facility Program:

'4B'X Unusual Network Condition

The message is too large. It exceeds the NCB buffer size specified in the LAN-Gateway Facility configuration file.

Note: *NCB buffer size is equal to the network internal buffer divided by the number of NCBs defined in the LAN-Gateway configuration file.*

'4D'X Unusual Network Condition

Appears when an NCB is issued to the Remote Facility before the actual connection has been made between the Remote and LAN-Gateway Facilities. May also indicate that the command did not complete because the connection was broken.

Index

B

breaking the PC-to-LAN connection 1-2
buffer, internal network
  maximum size 2-9

C

call initialization delay, specifying 2-8
call waiting options C-5
check bit 2-4, 2-8
checklists
  completion
    LAN definition data 2-9
    LAN-Gateway Access Table 2-4
    system communication data 2-3, 2-8
    system definition data 2-2, 2-7
  distribution 2-5, 2-10, 2-11
  photocopying 2-1
command
  LAN reset C-3
commands
  initialize 3-2
  install 3-2
  LAN reset 3-6, C-3
  LAN-Gateway Facility 3-5
  NETBIOS command handling C-7
  Remote Facility 3-5
communication lines
  analyzing the number required 2-6
  noisy 4-2
communication ports
  IBM Personal Computer Convertible
    with internal modem 2-3
    internal network name 2-10
communication requirements, analysis of 2-6
Configuration Utility program 3-2, D-1

D

DataCom
  See ROLM CBX, Data Communications Interfaces
Datagroup name 2-11
Datagroup password 2-11
Dataline account code 2-11
Dataline number 2-11
default settings
  changing Startup Key sequence 2-3
  configuration settings D-1
  when to change 2-7
dial-back 2-10
diskette
  program diskettes 3-3
  softpub guides 3-3
  3-1/2 inch iv
  5-1/4 inch iv
DOS
  editing keys 3-2
  knowledge required for users v

E

editing screen information 3-2
Error messages
  defined 4-1, E-1
  displayed while trying to connect to LAN 4-4
  occurring after connection 4-11
  occurring after initialization 4-1
  occurring during setup E-1
  restrictions caused by equipment 4-4

typical causes for appearing 4-2

F

Facility components
LAN-Gateway Facility
defined iii, 1-2
number of Remote Facilities supported 1-2
relationship to Remote Facility 1-2
NETBIOS emulation 1-1
Remote Facility
defined iii, 1-1
LAN access 1-1
NETBIOS emulation 1-1
Facility, the iii
filename
LAN-Gateway Facility configuration (GATEWAY.CFG) 2-7
Remote Facility configuration (REMOTE.CFG) 2-2
security file (GATEWAY.SEC) 2-11

I

IBM Asynchronous Communications Server Program
installing with IBM Remote NETBIOS Access Facility Program C-3
sharing COMM ports with IBM Remote NETBIOS Access Facility Program C-2
IBM PC Network iii
IBM Personal Computers
analyzing the number required 2-6
Convertible 2-3, 2-4
IBM Personal Computer (PC) iii
restrictions when using the Facility C-5
IBM Remote NETBIOS Access Facility Program
See also Facility components, LAN-Gateway Facility, Remote Facility
appearance to user 1-1
basic functions 1-3
breaking the PC-to-LAN connection 1-2
coexistence considerations C-1
coexistent LAN server functions C-2
configuring 3-1, 3-2
defined 1-1
description of iii
initializing 3-1, 3-2
installing 3-1, 3-2
licensing agreement iii
operation iii
performance and compatibility C-1
reconfiguring 3-1, 3-6
restrictions on the PC C-5
restrictions when running with IBM Asynchronous Communications Server Program C-2
sharing COMM ports with IBM Asynchronous Communications Server Program C-2
system administrator notes C-5
usage scenario 1-3
IBM Token-Ring Network iii
inactivity timeout, specifying 2-8
initialization account code 2-4
internal network name 2-10

K

Key sequence, Startup
changing the default 2-3
valid combinations 2-3

L

LAN
See local area network
LAN adapter
logical address 2-3
physical address 2-9
resetting using LANRESET C-4
LAN-Gateway
naming 2-7
number of 2-4
permanent 2-4
temporary 2-4, 2-5, 2-10
LAN-Gateway Facility
See also IBM Remote NETBIOS Access Facility Program, LAN-Gateway, Remote Facility
analyzing the number required 2-6
data needed to configure 2-7
default filename 2-7
LAN definition data 2-9
system communication data 2-8
system definition data 2-7
defined iii, 1-2
NETBIOS emulation 1-1
number of Remote Facilities supported 1-2
open sessions, maximum number 2-9
planning tasks 2-1
relationship to LAN 1-2
relationship to Remote Facility 1-2
set-up tasks 1-5
sharing COMM ports 2-8
LAN-Gateway security file
data needed to configure 2-10
collecting 2-11
default filename 2-11
using dial-back 2-10
line speed
limitations 2-3
maximum speed
using modems 1-4
using ROLM CBX 1-4
local area network (LAN)
IBM PC Network iii
IBM Token-Ring Network iii
ROLM CBX Datagroup name 2-4
telephone number 2-4
use with IBM Remote NETBIOS Access Facility Program iii

M

maximum port speeds C-9
modem
automatic dial 2-8
error message limitations 4-4
internal for IBM Personal Computer Convertible 2-3
maximum line speed 1-4, 2-8
special considerations when configuring B-7, B-9
modem pool 2-11, 4-9

N

NETBIOS
command handling C-7
commands supported 1-3
emulation by the Facility 1-1
network buffer
maximum size 2-9
Network Control Blocks (NCBs)
maximum number 2-9
networks
Private Branch Exchange (PBX) iii
Public Switched Network (PSN) iii

P

parity check bit 2-4, 2-8
Performance and Compatibility C-1
port speed
See line speed
Private Branch Exchange (PBX) iii
Public Switched Network (PSN) iii
publications

IBM publications A-1
Installing and Configuring Guides, description of v
Planning Guide, description of v
printing the softpub guides 3-3
ROLM publications A-2
viewing the softpub guides 3-4

R

Remote Facility
See also IBM Remote NETBIOS Access Facility, LAN-Gateway, LAN-Gateway Facility
data needed to configure 2-2
default filename 2-2
LAN-Gateway Access Table 2-4
system communication data 2-3
system definition data 2-2
defined iii, 1-1
LAN access 1-1
NETBIOS emulation 1-1
number of LAN-Gateways supported 1-3
planning tasks 2-1
set-up tasks 1-4
Remote User's Reference Card iv
information to be recorded on 2-5, 2-10
required programs and equipment
LAN-Gateway Facility B-3
Remote Facility B-1
return codes E-1, E-12
ROLM CBX
Data Communications (DataCom) Interfaces
maximum line speed 2-8
Datagroup name 2-4, C-6
Datagroup password 2-4
Dataline account code 2-4
Dataline number 2-4
initialization account code 2-4
special considerations when configuring B-6

S

security
asterisk (*) entries 2-5
dial-back 1-4, 2-10
identifying Remote Facilities 2-10
LAN-Gateway Access Table information 2-5
planning tasks 2-1
selecting dial-back 2-11
user ID and password 1-4
softpub guides
See also publications, Installing and Configuring Guides
See also publications, Softpub Remote, Softpub LAN-Gateway
description v
LAN-Gateway, contents of 3-3
program diskette, located on 3-3
Remote, contents of 3-3
Softpub LAN-Gateway iii, 3-3
Softpub Remote iii, 3-3
Startup Key sequence
changing the default 2-3
valid combinations 2-3
Status messages 4-1
stop bit 2-4, 2-8
storage
See required programs and equipment
system administrator
LAN 2-1, 2-5
ROLM 2-1, 2-5
special notes for Facility operation C-5

T

telephone number
IBM PC Convertible size restriction 2-4
LAN-Gateway 2-4

IBM

Reader's Comment Form

IBM Remote NETBIOS Access Facility Program Planning **SC30-3411-00**

Your comments assist us in improving the usefulness of our publications; they are an important part of the input used for revisions.

IBM may use and distribute any of the information you supply in any way it believes appropriate without incurring any obligation whatever. You may, of course, continue to use the information you supply.

Please do not use this form for technical questions regarding the IBM Personal Computer or programs for the IBM Personal Computer, or for requests for additional publications; this only delays the response. Instead, direct your inquiries or request to your authorized IBM Personal Computer dealer.

Comments:

IBM

Reader's Comment Form

IBM Remote NETBIOS Access Facility Program Planning **SC30-3411-00**

Your comments assist us in improving the usefulness of our publications; they are an important part of the input used for revisions.

IBM may use and distribute any of the information you supply in any way it believes appropriate without incurring any obligation whatever. You may, of course, continue to use the information you supply.

Please do not use this form for technical questions regarding the IBM Personal Computer or programs for the IBM Personal Computer, or for requests for additional publications; this only delays the response. Instead, direct your inquiries or request to your authorized IBM Personal Computer dealer.

Comments: