IBM

Token-Ring Network PC Adapter Hardware Reference Library

Guide to Operations

96X5734

IBM

Token-Ring Network
PC Adapter
Hardware Reference
Library

Guide to Operations

Note: This product is intended for use within a single establishment and within a single, homogeneous user population. For sensitive applications requiring isolation from each other, management may wish to provide isolated cabling or to encrypt the sensitive data before putting it on the network.

Third Edition (February 1988)

Changes are made periodically to the information herein; these changes will be incorporated in new editions of this publication.

It is possible that this material may contain reference to, or information about, IBM products (machines and programs), programming, or services that are not announced in your country. Such references or information must not be construed to mean that IBM intends to announce such IBM products, programming, or services in your country.

Publications are not stocked at the address given below; requests for IBM publications should be made to your IBM representative or to the IBM branch office serving your locality.

A form for reader's comments is provided at the back of this publication. If the form has been removed, comments may be addressed to IBM Corporation, Communication Products Information Development, Department E02, PO Box 12195, Research Triangle Park, North Carolina, U.S.A. 27709. IBM may use or distribute any of the information you supply in any way it believes appropriate without incurring any obligation whatever. You may, of course, continue to use the information you supply.

© Copyright International Business Machines Corporation 1988

Federal Communications Commission (FCC) Statement

Warning: This equipment generates, uses, and can radiate radio frequency energy and if not installed and used in accordance with the instruction manual, may cause interference to radio communications. It has been tested and found to comply with the limits for a Class A computing device pursuant to Subpart J of Part 15 of FCC rules, which are designed to provide reasonable protection against such interference when operated in a commercial environment. Operation of this equipment in a residential area is likely to cause interference in which case the user at his own expense will be required to take whatever measures may be required to correct the interference.

Instructions to User: If this equipment does cause interference to radio or television reception, which can be determined by turning the equipment off and on, the user is encouraged to try to correct the interference by one or more of the following measures:

- Reorient the receiving antenna.
- Relocate the computer with respect to the receiver.
- Move the computer away from the receiver.
- Plug the computer into a different outlet so that computer and receiver are on different branch circuits.

Properly shielded and grounded cables and connectors must be used for connection to peripherals in order to meet FCC emission limits. Proper cables are available from IBM authorized dealers. IBM is not responsible for any radio or television interference caused by using other than recommended cables or by unauthorized modifications to this equipment. It is the responsibility of the user to correct such interference.

If necessary, the user should consult the dealer or an experienced radio/television technician for additional suggestions. The user may find the following booklet prepared by the Federal Communications Commission helpful:

How to Identify and Resolve Radio-TV Interference Problems

This booklet is available from the following:

Consumer Assistance and
Small Business Division
Room 254
1919 M St. NW
Washington, DC 20554
Tele (202) 632-7000

FOB Public Contact Branch
Room 725
1919 M St. NW
Washington, DC 20554
Tele (202) 634-1940

Electrical Safety

Electrical current from power, telephone, and communications cables is hazardous. Connect and disconnect cables as shown when installing, moving, or opening the covers of personal computers or attached devices.

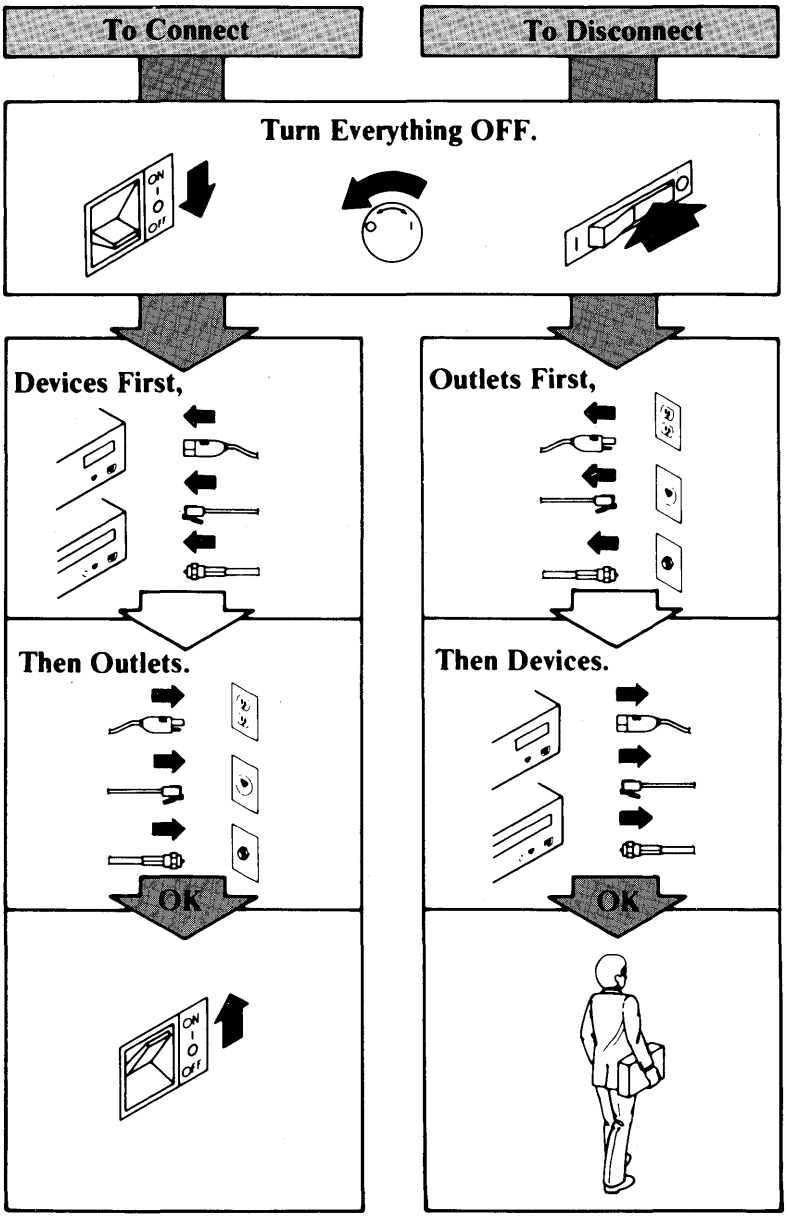

Chapter 4 describes how to load the IBM Token-Ring Network PC Adapter Support Interface into the computer.

Appendix A lists all the files on the IBM Token-Ring Network PC Adapter Diskette.

Appendix B provides a memory map to aid you in selecting read-only memory (ROM) locations.

Appendix C contains a Statement of Service.

About This Book

The IBM Token-Ring Network PC Adapter II (short card) enables you to connect your IBM Personal Computer (PC) and IBM PERSONAL SYSTEM/2[1] Model 25 or Model 30 to the IBM Token-Ring Network. This book tells you how to install and use this adapter in a number of different IBM PCs and the IBM Personal System/2 (Model 25 or Model 30).

Note: The IBM Token-Ring Network PC Adapter II (short card) can support the original IBM Token-Ring Network PC Adapter (long card) function. Refer to "Setting the Switches" on page 2-2 for information on proper switch setting.

Chapter 1 contains a complete list of all the IBM PCs and IBM Personal System/2s that are supported. It also describes the parts of your Adapter Kit and what is needed to use them.

Chapter 2 describes the installation of the adapter in each of the IBM computers listed in Chapter 1, with the exception of the IBM *Portable* Personal Computer, IBM Industrial Computers, and IBM Personal System/2 Models 25 and 30. You are referred to the IBM *Portable* Personal Computer's *Guide to Operations* for instructions on installing the adapter in an IBM *Portable* Personal Computer, the *IBM Industrial Computer Installation User's Guide* for instructions on installing the adapter in an IBM Industrial Computer, and the IBM Personal System/2's *Guide to Operations* for instructions on installing the adapter in an IBM Personal System/2 (Model 25 or Model 30).

Chapter 3 describes how to use the IBM Token-Ring Network PC Adapter Diagnostics to test the adapter and cable. It also provides a quick-reference guide to the Adapter Diagnostics menus and a message listing that includes a description and the action to be taken for each message generated by the Adapter Diagnostics.

---

[1] IBM Personal System/2 is a trademark of International Business Machines Corporation.

Required Publications

One of the following publications is a prerequisite for installing and using the IBM Token-Ring Network PC Adapter II.

- The Guide to Operations or Installation and Setup for your IBM computer if included in the following list:
  - *IBM Industrial Computer Installation and Setup*
  - IBM Personal System/2 (Model 25 or Model 30) *Guide to Operations*
  - IBM *Portable* Personal Computer *Guide to Operations.*

Related Publications

Other documents related to the IBM PC, the IBM Personal System/2 (Model 25 or Model 30), and the IBM Token-Ring Network include:

- IBM Personal Computer *Hardware Maintenance and Service* manual
- IBM Personal Computer *Disk Operating System* manual
- IBM Personal Computer *Technical Reference*
- IBM Personal System/2 (Model 25 or Model 30) *Technical Reference*
- IBM Personal System/2 (Model 25 or Model 30) *Supplement for the Hardware Maintenance Reference*
- IBM Personal System/2 (Model 25 or Model 30) *Supplement for the Hardware Maintenance and Service* manual
- *IBM Token-Ring Network PC Adapter Technical Reference*
- *IBM Token-Ring Network Introduction and Planning Guide*, GA27-3677* (gives a basic understanding of the IBM Token-Ring Network).
- *IBM Token-Ring Network Problem Determination Guide*, SX27-3710*
- *IBM 7531/7532 Industrial Computer Maintenance Information*

- *IBM 5531 Industrial Computer Maintenance Information*
- *IBM Token-Ring Network Installation Guide*, GA27-3678*
- *IBM Token-Ring Network Telephone Twisted-Pair Media Guide*, GA27-3714*
- *IBM Local Area Network Support Program User's Guide*
- *IBM Token-Ring Network Architecture Reference*

For assistance in obtaining IBM manuals, see your place of purchase. For items marked with an asterisk (*), see your IBM representative or IBM branch office.

Required Software

You need the IBM Personal Computer Disk Operating System (DOS), Version 3.2 or later installed on your IBM PC.

Using This Manual

When you use this manual, read completely the section you are using before trying to perform the task. Make sure you are familiar with a task before you start.

Contents

Chapter 1. Introduction 1-1
The Adapter II Kit 1-3
The IBM Token-Ring Network PC Adapter Diskette . . 1-3
What You Need 1-4

Chapter 2. Installing the IBM Token-Ring Network PC Adapter II 2-1
Setting the Switches 2-2
Setting the ROM Address Switches 2-4
Setting the Interrupt Level Switches 2-4
Setting the Primary-Alternate Switch 2-6
Setting the Shared RAM Size Switch 2-7
Switches 11 and 12 2-8
Labeling Adapters 2-9
Where To Go for Installation Instructions 2-10
Installing an Adapter (IBM Personal System/2 Model 25 or Model 30) 2-11
Installing an Adapter (IBM Portable Personal Computer) 2-12
Installing an Adapter (IBM Industrial Computer) 2-13
Installing an Adapter (IBM PC, IBM PC XT, IBM Personal Computer AT) 2-14
Removing the Cover: IBM PC and IBM PC XT 2-17
Removing the Cover: IBM Personal Computer AT . . . 2-19
The IBM Token-Ring Network PC Adapter II 2-21
Reinstalling the Cover: IBM PC and IBM PC XT . . . 2-27
Reinstalling the Cover: IBM Personal Computer AT . . 2-29

Chapter 3. Using the IBM Token-Ring Network PC Adapter Diagnostics 3-1
Loading the Adapter Diagnostics 3-1
Running the Adapter Diagnostics 3-5
Special Key Functions and Quick-Reference Guide 3-6
Menu 1 - Copyright/Diagnostic Options 3-8
Menu 2 — Installed Adapters List 3-10
Menu 3 — System Checkout 3-12
Menu 4 — Log Utilities 3-14
Menu 5 — Running Tests Multiple Times 3-16
Menu 6 — Shared RAM Selection 3-18
Menu 7 — Cable Description 3-20

After Running the Diagnostics 3-22
Adapter Diagnostics Messages 3-23
Adapter Status Area 3-24
Testing Status and Error Message Area 3-24
Diagnostic Test - No Error 3-25
Diagnostic Test - Error 3-26
Message Listings 3-27

Chapter 4. Using the Adapter Support Interface 4-1
Instructions for a Fixed Disk 4-2
Instructions for a Working Diskette 4-3
The Adapter Support Interface Batch File (ASILOAD) . . . 4-4
Adapter Parameters 4-6
Adapter Addresses 4-6
Shared RAM 4-7
Coding Adapter Parameters 4-8
System Configuration Information 4-9
The DOS Internal Stack Error 4-11

Appendix A. Directory List A-1

Appendix B. IBM PC and IBM Personal System/2 (Model 25 or Model 30) Memory B-1
Setting the Read-Only Memory (ROM) B-1
Shared RAM B-2
Memory Map B-2
Memory Map Listings B-3

Appendix C. Statement of Service C-1

List of Abbreviations X-1

Glossary X-3

Index X-5

Figures

1-1. The Adapter II Kit 1-2
1-2. IBM Computer Models Supported by the IBM Token-Ring Network PC Adapter II 1-4
2-1. Switch Block Location for Adapter II 2-3

Summary of Amendments

This guide has been updated to reflect the following changes to the IBM Token-Ring Network PC Adapter II:

- Technological advances have permitted the manufacture of a short card.
- The adapter now offers switchable Shared RAM (8 Kb and 16 Kb).
- The diagnostics have been updated to provide a menu for Shared RAM selection.

Chapter 1. Introduction

The IBM Token-Ring Network PC adapter comes in two models: the Adapter (long card) and the Adapter II (long and short card). These adapters are IBM computer communication cards, each of which occupies one slot in an IBM PC family, IBM Industrial Computer, or an IBM Personal System/2 (Model 25 or Model 30). Along with the Adapter Support Interface and one or more application programs, either adapter can allow your computer to communicate on the network.

The Adapter II has a total of 16 kilobytes (Kb) of memory, 8 Kb more memory than the Adapter. This additional memory provides certain added capability.

This *Guide to Operations* applies only to the Adapter II (short card). This version of the IBM Token-Ring Network PC adapter is functionally equivalent to the long card version and can replace either the Adapter (long card) or the Adapter II (long card). (See Figure 1-1 on page 1-2)

Note: "Setting the Switches" on page 2-2 shows you the proper switch settings.

The term "IBM Token-Ring Network PC adapter" as used in this guide applies to both the Adapter and the Adapter II unless otherwise noted. The term "computer" applies to the model of IBM Personal Computer or IBM Personal System/2 (Model 25 or Model 30) that you are using unless otherwise noted.

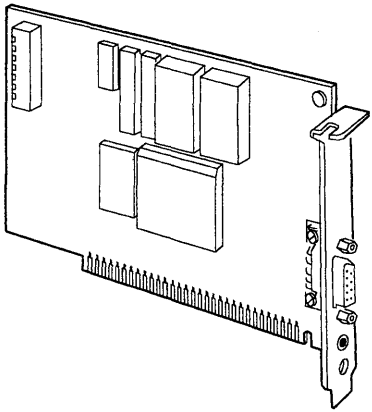

Adapter II

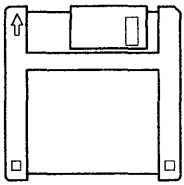

3.5-inch Diskette

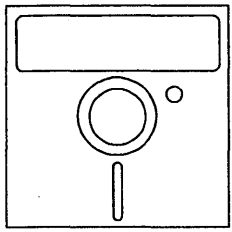

5.25-inch Diskette

Figure 1-1. The Adapter II Kit. Each kit contains one adapter, a 5.25-inch diskette, and a 3.5-inch diskette.

The Adapter II Kit

The IBM Token-Ring Network PC Adapter II can be purchased in a kit containing the following items:

- IBM Token-Ring Network PC Adapter II
- IBM Token-Ring Network PC Adapter Diskettes (both 5.25-inch and 3.5-inch versions)
- This *Guide to Operations*.

The IBM Token-Ring Network PC Adapter Diskette

The IBM Token-Ring Network PC Adapter Diskette is available in both 3.5-inch and 5.25-inch format. The information contained on the diskettes is identical.

Note: For a list of the files on these diskettes, see Appendix A.

The IBM Token-Ring Network PC Adapter Diskette contains the following programs:

- The IBM Token-Ring Network PC Adapter Support Interface

  The Adapter Support Interface handles communication between the IBM Token-Ring Network and the system unit.

- The IBM Token-Ring Network PC Adapter Diagnostics

  The Adapter Diagnostics check the function of the adapter.

- The Ring Diagnostic

  The Ring Diagnostic displays status information and data messages for the ring and the adapters on the ring. To use the Ring Diagnostic, refer to the *IBM Token-Ring Network Problem Determination Guide*.

What You Need

To use an adapter, you need the following items:

- An IBM PC, an IBM Industrial Computer, or an IBM Personal System/2 (Model 25 or Model 30) (with a PC I/O channel) with at least 256 Kb of memory. The adapters will work in the following computers as illustrated in the chart below.

	Install One Adapter II	Install Two Adapter IIs	Install One Adapter and One Adapter II
IBM Personal Computer	√		
IBM Portable Personal Computer	√		
All Models of the IBM Personal Computer XT	√	√	√
All Models of the IBM Personal Computer AT	√	√	√
IBM Industrial Computer (Model 5531)	√	√	
IBM Industrial Computer (Model 7531)	√	√	
IBM Industrial Computer (Model 7532)	√	√	
IBM Personal System/2 (Model 25)	√		
IBM Personal System/2 (Model 30)	√	√	√

Figure 1-2. IBM Computer Models Supported by the IBM Token-Ring Network PC Adapter II

- One of the following:
  - An IBM Token-Ring Network PC Adapter Cable (P/N 6339098), if your network uses IBM Cabling System data grade media
  - A Type 3 Media Filter, or equivalent, if your network uses telephone twisted-pair media. Refer to the *IBM Token-Ring Network Telephone Twisted-Pair Media Guide*, GA27-3714.
- A 5.25-inch double-sided, 360-Kb compatible, diskette drive or a 3.5-inch, 720-Kb compatible, diskette drive.
- One of the following:
  - An IBM monochrome display or equivalent.
  - An IBM color display or equivalent.
- The IBM Personal Computer Disk Operating System (DOS), Version 3.2 or later.
- One blank diskette to match the drive.
- An IBM printer, or its equivalent, if you want printer output.
- Possibly an application program to run on the IBM Token-Ring Network. See your place of purchase for a list of the application programs available.

Chapter 2. Installing the IBM Token-Ring Network PC Adapter II

This chapter shows you how to install an IBM Token-Ring Network PC Adapter II in the IBM computers mentioned in Figure 1-2 on page 1-4. Before installing the adapter, make sure that you read the following sections: "Setting the Switches" on page 2-2 and "Labeling Adapters" on page 2-9.

Setting the Switches

Each adapter has one switch block with twelve switches on its component side (See Figure 2-1 on page 2-3).

These switches determine:

- Where the system unit addresses the read-only memory (ROM) of the adapter.
- What interrupt level the system unit uses to address the adapter.
- Whether this adapter is set as the first (primary) or second (alternate) adapter in this system unit. This may be dependent on whether or not another network adapter is installed. Read all the documentation for adapters going into this computer before setting the primary-alternate switch.
- Whether this adapter will use 8 Kb or 16 Kb of computer memory space.

You must set these switches before installing a new adapter. This section shows you the proper settings.

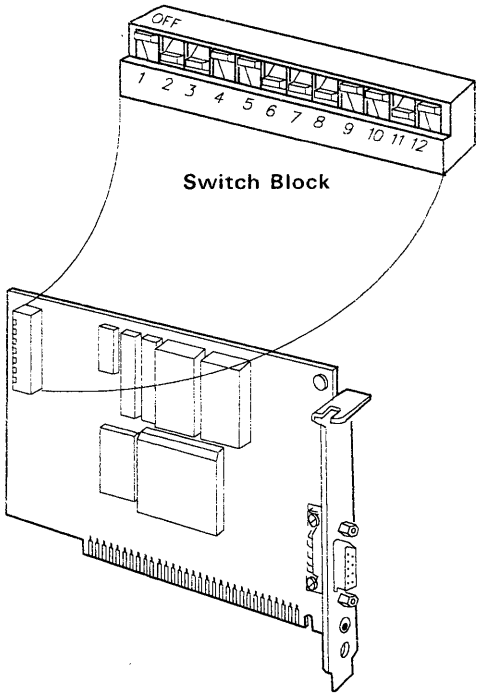

Figure 2-1. Switch Block Location for Adapter II

The following figure shows a switch set in the **Off** position as well as an example of how that position is illustrated in this guide.

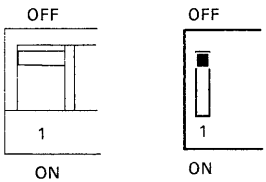

Labeling Adapters

It is important to label the IBM Token-Ring Network PC Adapter II with the adapter model type and whether it is the primary or alternate adapter. Create a label (possibly with tape) as shown in the following diagram. Place it on the end of the adapter so that it will be visible after installation.

Adapter Label

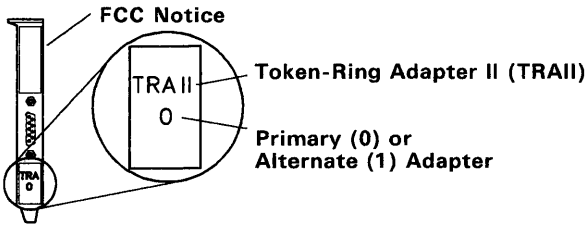

You may also want to put another label on the front of the system unit that includes more information. This label will make the information available without having to move the system unit.

System Unit Label

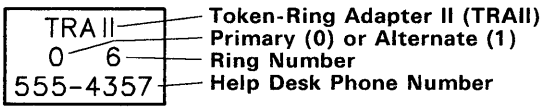

Where To Go for Installation Instructions

If you are installing an adapter in an IBM Personal System/2 (Model 25 or Model 30), go to "Installing an Adapter (IBM Personal System/2 Model 25 or Model 30)" on page 2-11 for installation instructions.

If you are installing an adapter in an IBM *Portable* Personal Computer, go to "Installing an Adapter (IBM Portable Personal Computer)" on page 2-12 for installation instructions.

If you are installing an adapter in an IBM Industrial Computer, go to "Installing an Adapter (IBM Industrial Computer)" on page 2-13 for installation instructions.

If you want to install an adapter in an IBM PC, an IBM PERSONAL COMPUTER XT,[1] or an IBM Personal Computer AT, go to "Installing an Adapter (IBM PC, IBM PC XT, IBM Personal Computer AT)" on page 2-14 for detailed instructions.

---

[1] IBM Personal Computer XT is a trademark of International Business Machines Corporation.

Installing an Adapter (IBM Personal System/2 Model 25 or Model 30)

If you have an IBM Personal System/2 Model 25 or Model 30:

1. Make sure you have recorded your switch settings and labeled the adapter. See "Setting the Switches" on page 2-2 and "Labeling Adapters" on page 2-9.

2. If you have two adapters, make sure that you install both adapters before replacing the computer cover.

3. Go to "Installing Your Options" in the IBM Personal System/2 (Model 25 or Model 30) *Guide to Operations* for installation instructions.

4. After completing the adapter installation, return to this manual and go to Step 33 on page 2-31.

Installing an Adapter (IBM Portable Personal Computer)

If you have an IBM *Portable* Personal Computer:

1. Make sure you have recorded your switch settings and labeled the adapter. See "Setting the Switches" on page 2-2 and "Labeling Adapters" on page 2-9.

2. Go to "Option Installation" in the IBM *Portable* Personal Computer *Guide to Operations* for installation instructions.

3. After completing the adapter installation, return to this manual and go to step 33 on page 2-31.

Installing an Adapter (IBM Industrial Computer)

If you have an IBM Industrial Computer:

1 Make sure you have recorded your switch settings and labeled the adapter. See "Setting the Switches" on page 2-2 and "Labeling Adapters" on page 2-9.

2 If you have two adapters, make sure you install both before replacing the computer cover.

3 Go to Chapter 1 of the *IBM Industrial Computer Installation and Setup* manual for installation instructions.

4 After completing the adapter installation, return to this manual and go to step 33 on page 2-31.

Installing an Adapter (IBM PC, IBM PC XT, IBM Personal Computer AT)

If you want to install an adapter in an IBM PC, an IBM PC XT, or an IBM Personal Computer AT, continue with the following procedure.

Tools

- Medium, flat-blade screwdriver
- Small, flat-blade screwdriver
- Medium screwstarter (optional)

1 Make sure you have recorded your switch settings and labeled the adapter. See "Setting the Switches" on page 2-2 and "Labeling Adapters" on page 2-9.

Warning: If you have an IBM computer with a fixed disk drive, you need to prepare the fixed disk for relocation to protect it from being damaged. Load the IBM computer diagnostics diskette for your system unit and select the option "Prepare System for Relocation" before continuing with this procedure.

2 Set the power switch on your computer to **Off**.

3 Set the power switch on all attached devices to **Off**.

4 Unplug the computer and all attached devices from electrical outlets.

5 Disconnect all cables from the rear of the computer. Note where they are originally connected so you will be able to reconnect the cables after installation.

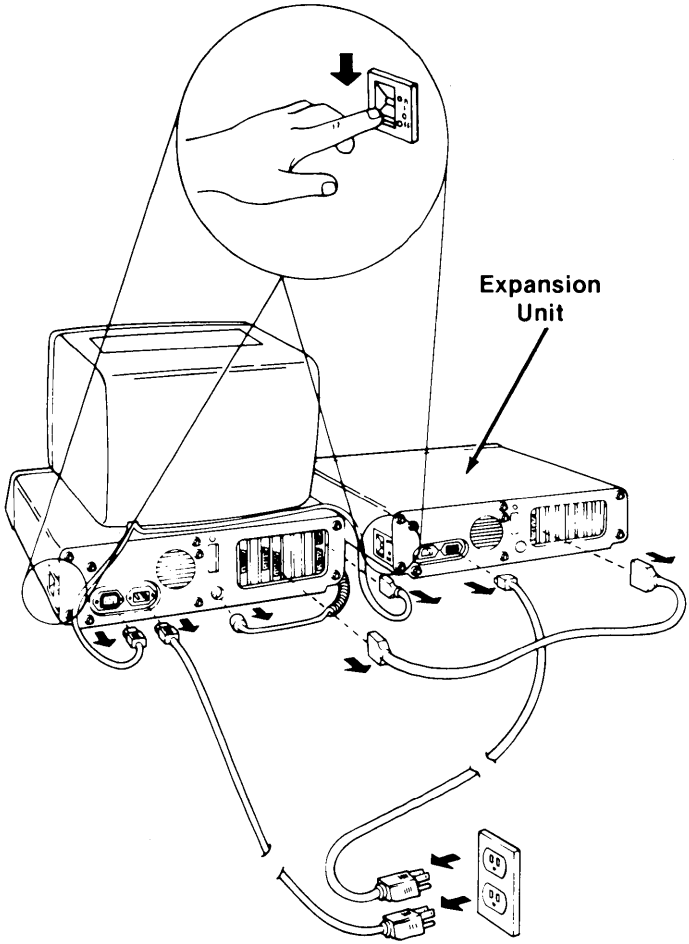

6 Move your keyboard, display, and all external options away from the work area.

7 Place the computer in a position so that you can work at the rear.

8 If you have an IBM PC or IBM PC XT, go to "Removing the Cover: IBM PC and IBM PC XT" on page 2-17.

9 If you have an IBM Personal Computer AT, go to "Removing the Cover: IBM Personal Computer AT" on page 2-19.

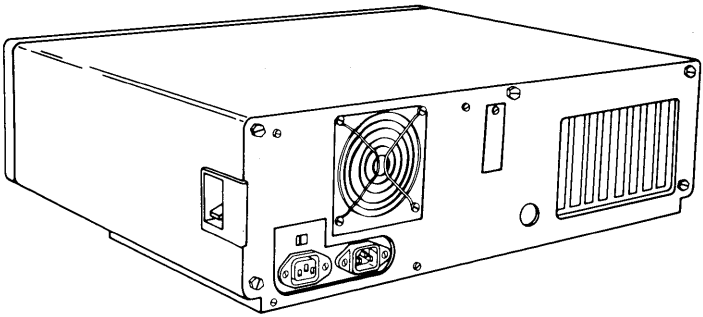

Removing the Cover: IBM PC and IBM PC XT

10 If your computer has a keylock, remove it before continuing. Use the screwdriver to remove all cover mounting screws. Do not remove the base screws. Turn the screws counterclockwise as shown. Be sure to save all screws for the reinstallation of the cover.

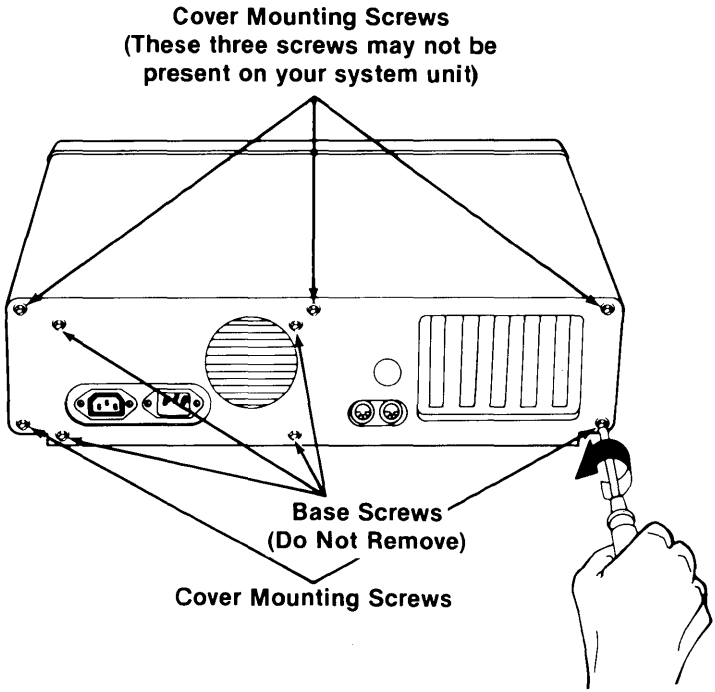

11 Move to the front of your computer. Carefully slide the cover toward the front as shown below. When the cover will go no further, tilt it up, remove it from the base, and set it aside.

Go to "The IBM Token-Ring Network PC Adapter II" on page 2-21.

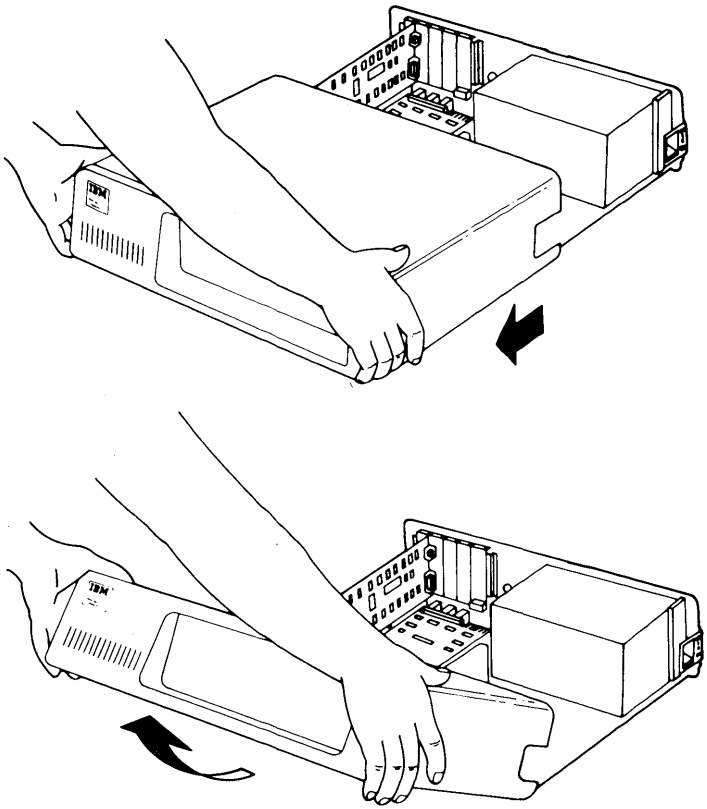

Removing the Cover: IBM Personal Computer AT

12 If your computer is locked, unlock it as shown below. Insert the key into the lock. Push and turn the key counterclockwise. Then remove the key.

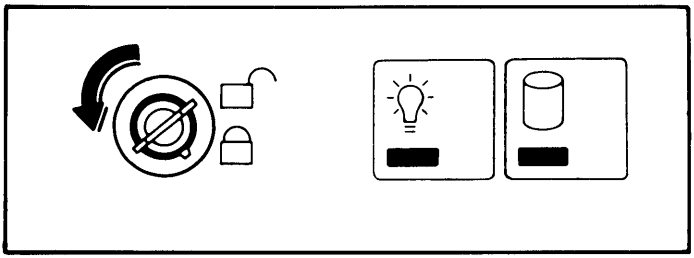

13 Remove the back panel from the rear of your system unit.

Note: The back panel is attached to the system unit with plastic fastener strips.

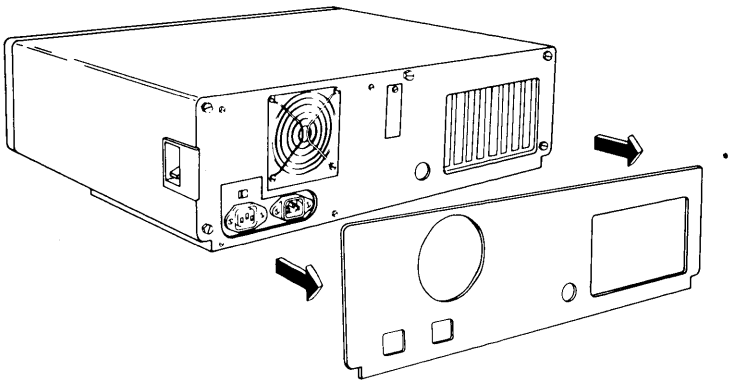

14 Use a flat-blade screwdriver to remove the five cover mounting screws. Turn the screws counterclockwise as shown. Be sure to save all the screws for the reinstallation of the cover.

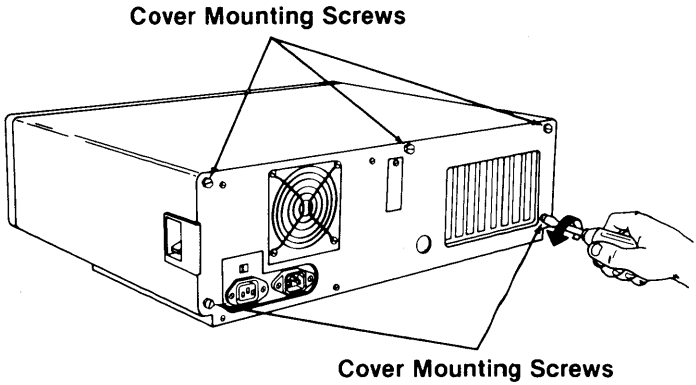

15 Move to the front of your computer. Carefully slide the cover toward the front as shown below. Set the cover aside.

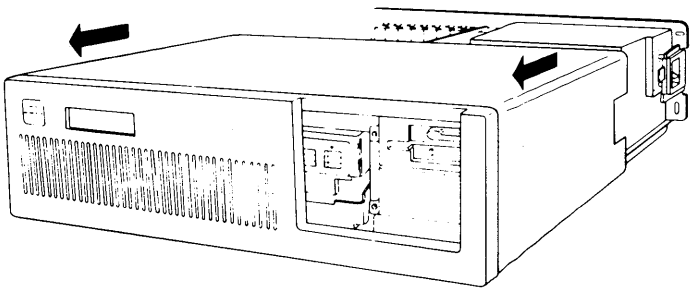

The IBM Token-Ring Network PC Adapter II

16 Use the following illustration to familiarize yourself with the adapter.

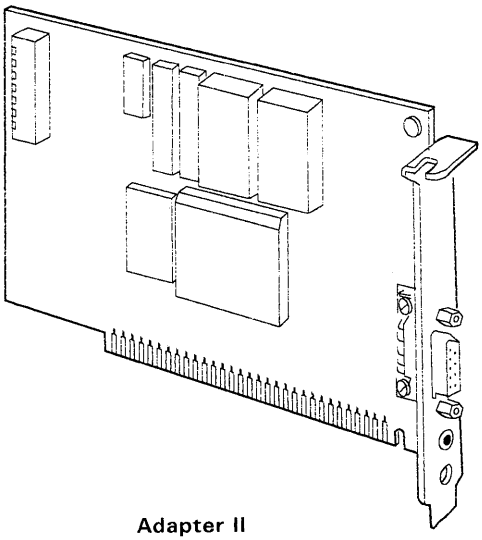

Adapter II

17 Look at the inside left rear of your computer. You see five card slots in the IBM PC and eight card slots in the IBM PC XT and IBM Personal Computer AT.

You can install the IBM Token-Ring Network PC Adapter II in any available slot of these machines which will physically accommodate the adapter, except slot number 8 of the IBM PC XT. (The card will not operate in slot 8 of the IBM PC XT.)

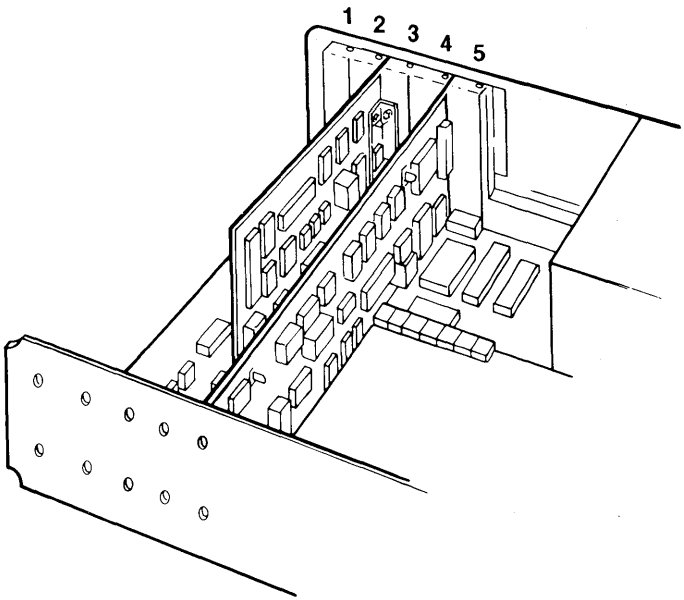

18 Use a flat-blade screwdriver (or screwstarter) to remove the screw that holds the expansion slot cover in place. Turn the screw counterclockwise. Be sure you save the screw to install the adapter later.

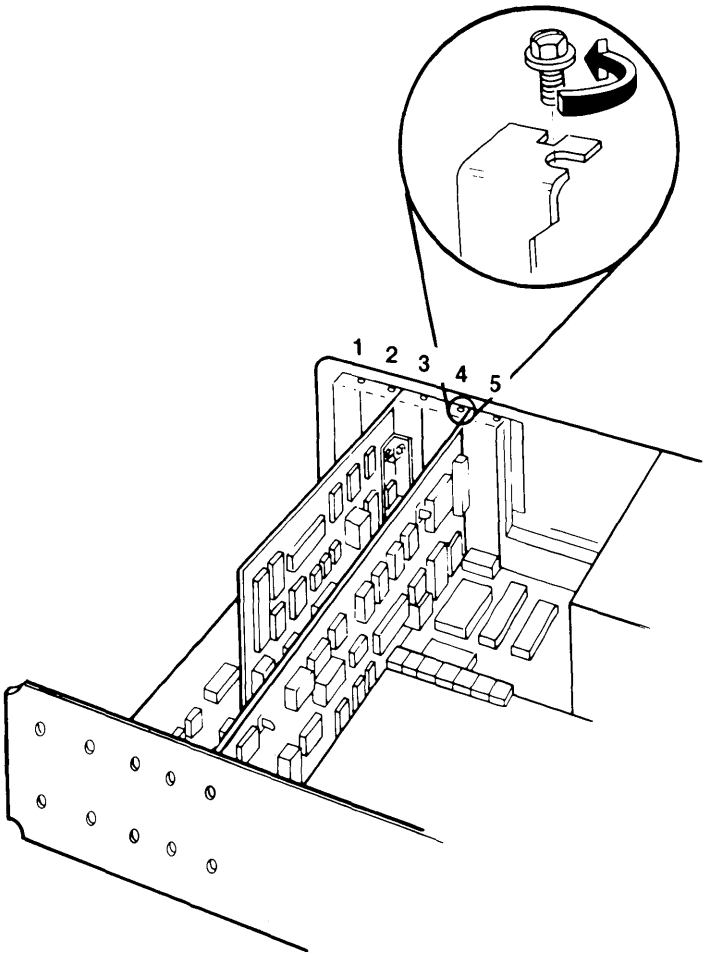

19 Remove the expansion slot cover.

20 Check the adapter switch settings and make sure that you have recorded how they were set. See "Setting the Switches" on page 2-2.

21 Hold the top of the new adapter and press it firmly (until it is seated) into the expansion slot as shown below.

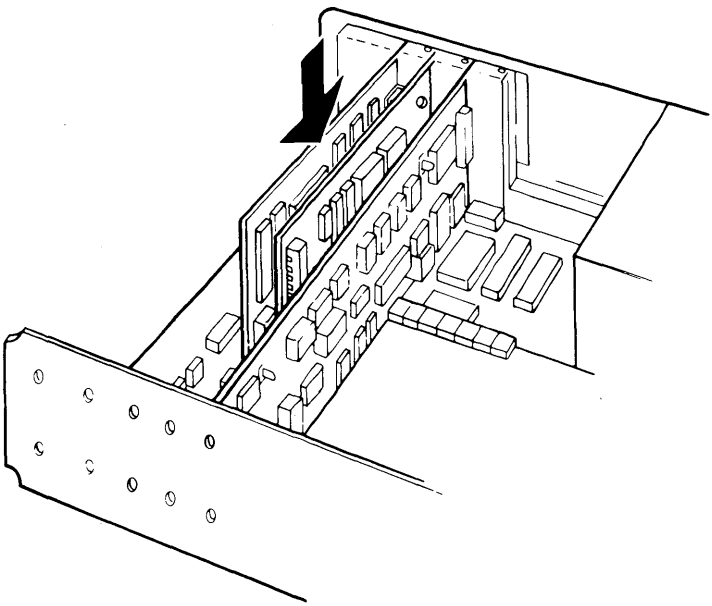

22 Align the slot in the adapter retaining bracket with the hole in the rear panel of your computer. Start the screw clockwise (with a flat-blade screwdriver or screwstarter), then tighten with a flat-blade screwdriver.

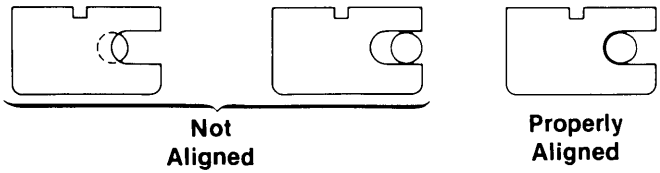

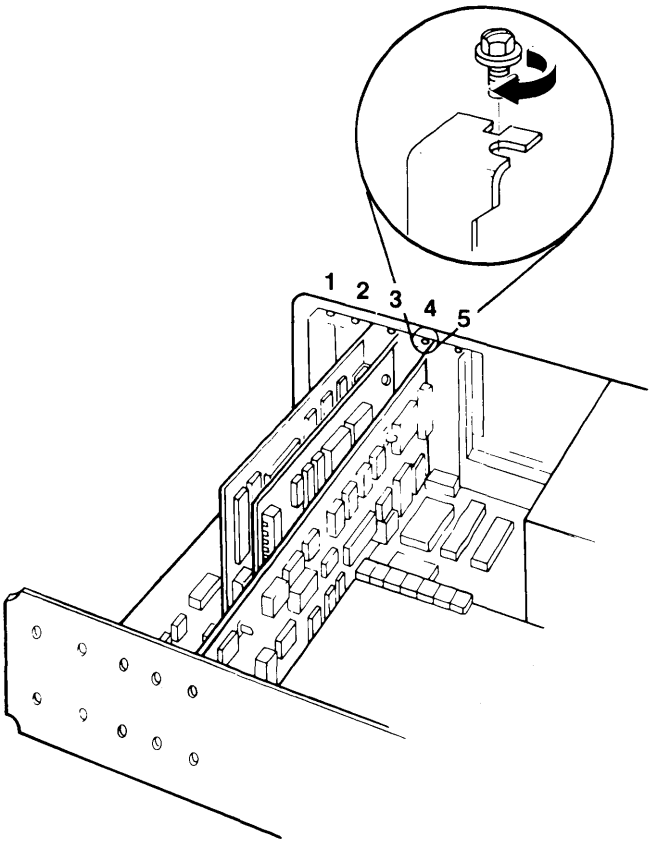

23 Your adapter is now installed. If you have two adapters, make sure you install both before replacing the computer cover.

24 If you have an IBM PC or IBM PC XT, go to "Reinstalling the Cover: IBM PC and IBM PC XT" on page 2-27.

25 If you have an IBM Personal Computer AT, go to "Reinstalling the Cover: IBM Personal Computer AT" on page 2-29.

Reinstalling the Cover: IBM PC and IBM PC XT

26 Reinstall the cover by tilting it at an angle as shown. Carefully slide it toward the rear of the computer.

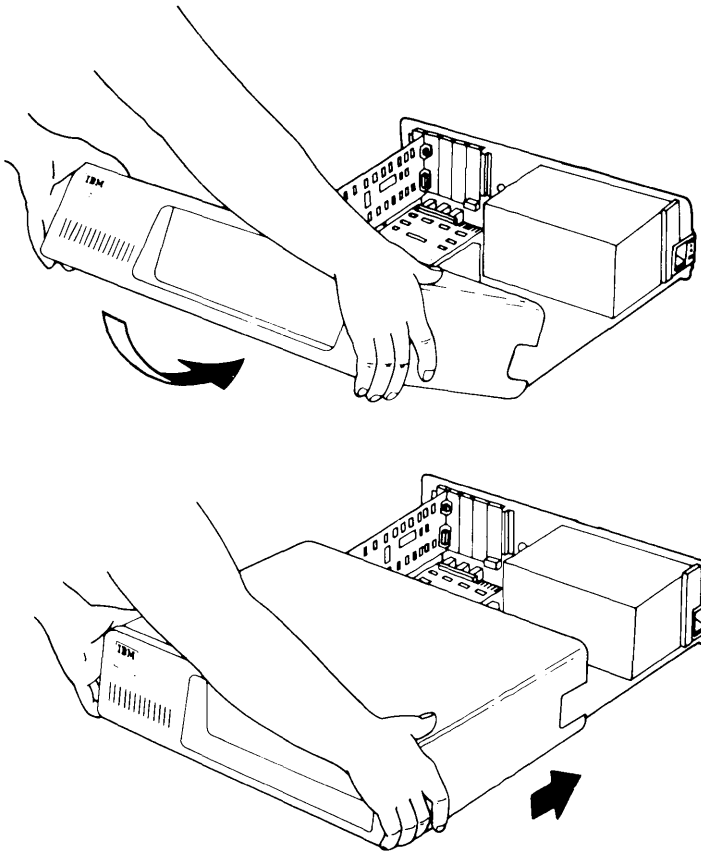

27 If your computer has a keylock, install it before continuing.

28 When the cover is all the way to the rear, align each screw with the threaded tabs. Use a flat-blade screwdriver (or screwstarter) and turn each screw clockwise to tighten it. Go to step 33 on page 2-31.

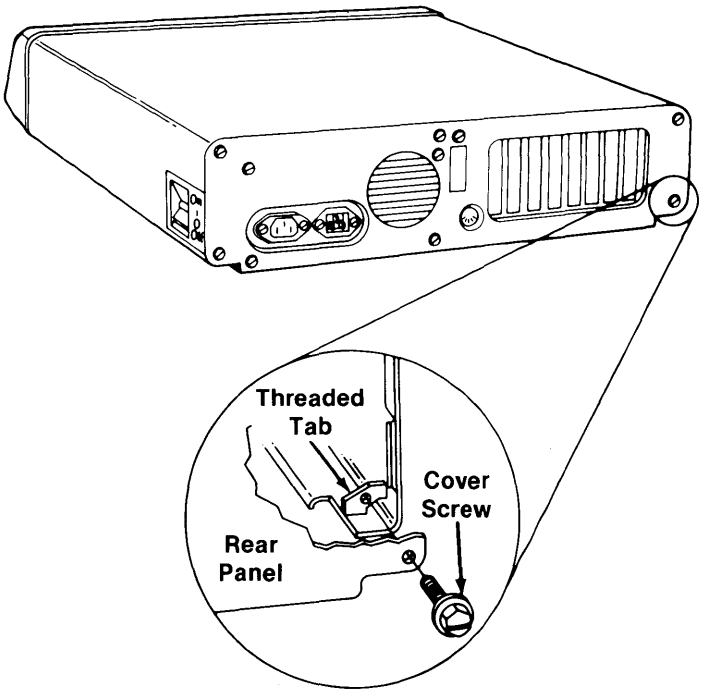

Reinstalling the Cover: IBM Personal Computer AT

29 Lift the cover up against the rail and slide it onto your computer. Be sure that the cover is under the rail on the frame.

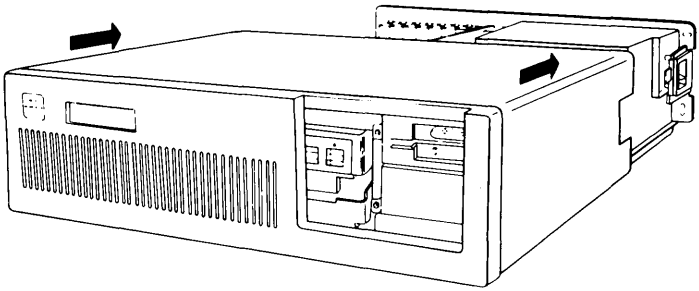

30 Use a flat-blade screwdriver (or screwstarter) to install the five cover mounting screws.

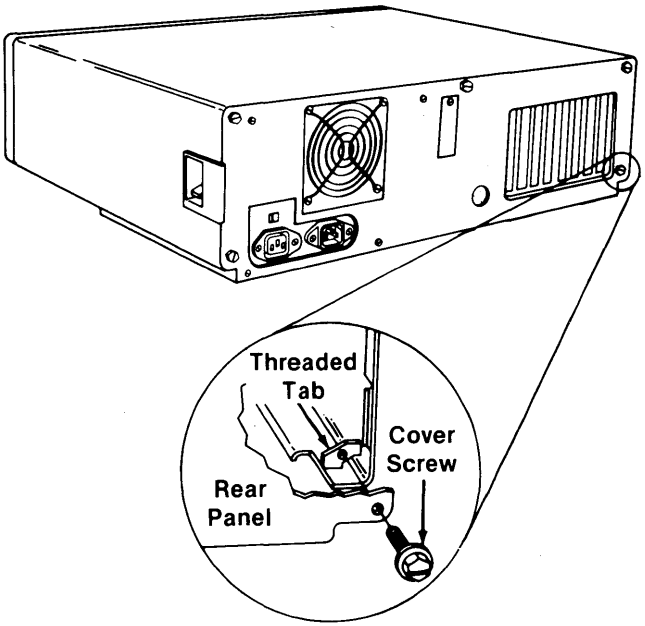

31 Reinstall the back panel on your IBM Personal Computer AT.

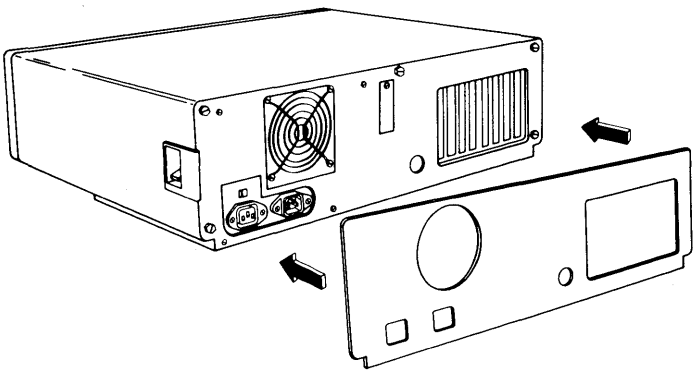

32 If your system uses IBM Cabling System data grade media, continue with step 34. If your system uses telephone twisted-pair media, go to step 36 on page 2-32.

33 Find the adapter cable(s) (P/N 6339098).

Warning: Be sure to connect the cable(s) with the green-dot label to the adapter(s) with the green dot. Connecting the cable to the wrong type of adapter will cause the Token-Ring Network to fail.

34 Connect the cable(s) to the adapter(s). Turn the two connector screws clockwise until the cable(s) are seated.

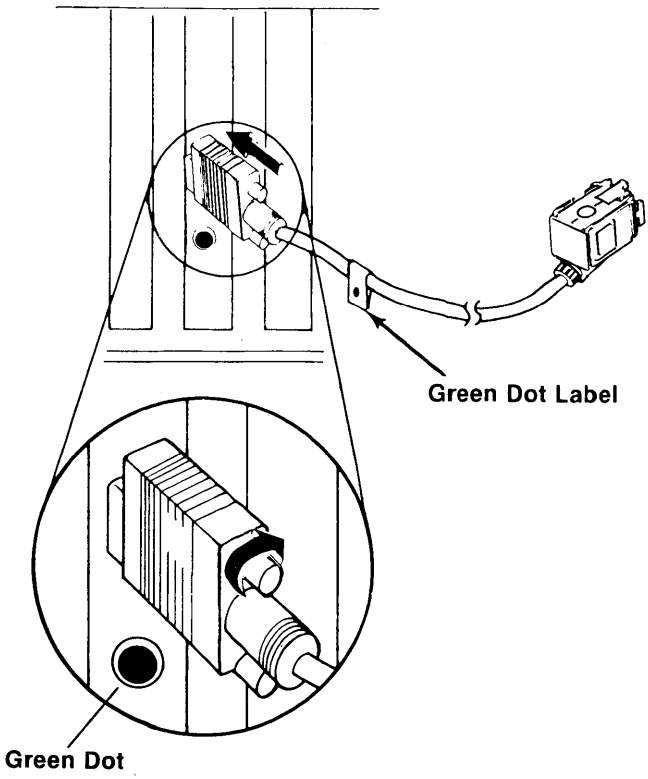

35 Reconnect all the cables that you disconnected in step 6 on page 2-15. If you don't remember how the cables were attached, refer to your computer's *Guide to Operations* to reconnect the cables to the computer.

Before connecting your IBM computer to the IBM Token-Ring Network, see Chapter 3 to check out the adapter.

36 Repeat this procedure until you have installed IBM Token-Ring Network PC adapters in every computer that will be on the network.

Chapter 3. Using the IBM Token-Ring Network PC Adapter Diagnostics

The IBM Token-Ring Network PC Adapter Diagnostics test the adapter and the adapter cable. Results are displayed as messages on the screen.

You should run the Adapter Diagnostics after installation, after repairs, or when you suspect a problem. This chapter tells you how to load and run the diagnostics and what to do after running the diagnostics.

The diagnostics contained on the diskettes provided with this manual will operate on all IBM Token-Ring Network PC Adapter and Adapter II products. When running the diagnostics, the phrase "IBM Token-Ring Network Adapter" can refer to either the Adapter or Adapter II.

Loading the Adapter Diagnostics

To load the Adapter Diagnostics:

1 Set the power switch on the system unit (and the expansion unit, if attached) to **Off**.

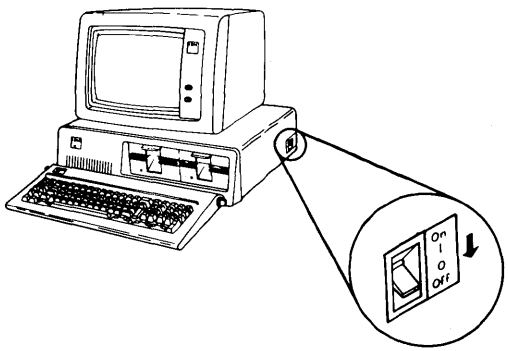

2 Do one of the following for each IBM Token-Ring Network PC Adapter II in your system unit:

- If your network uses IBM Cabling System data grade media, disconnect the adapter cable from the network. Make sure that the other end of the cable is still connected to the IBM Token-Ring Network PC Adapter II.
- If your network uses telephone twisted-pair media, disconnect the Type 3 Media Filter, or equivalent (if already connected), from the adapter. Install the wrap plug (attached to the Type 3 Media Filter) onto the adapter.

3 Insert the IBM Token-Ring Network PC Adapter Diskette (with the label facing up) into diskette drive **A**.

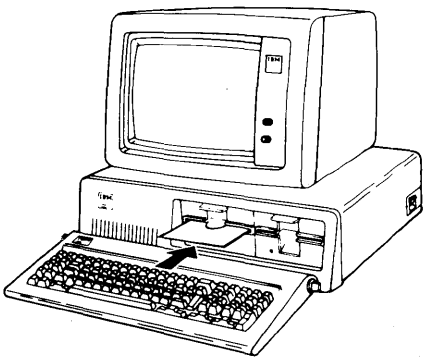

4 Close the diskette drive door.

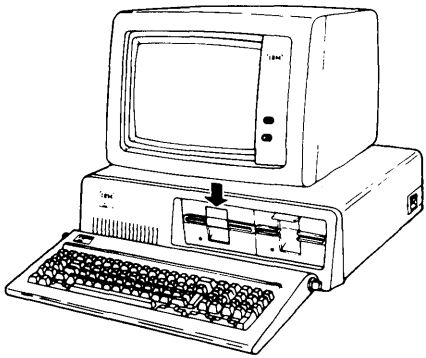

5 Set the power switch on the expansion unit (if attached) to **On**.

6 Set the power switch on the system unit to **On**.

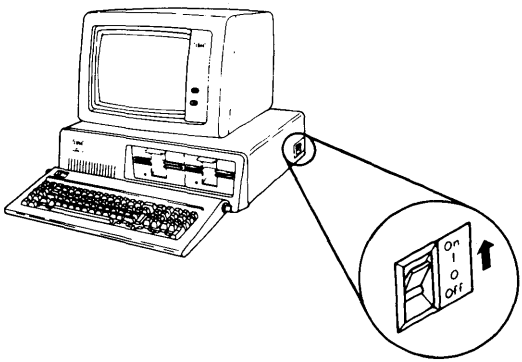

7 The system unit's power-on self test (POST) runs, and the Adapter Diagnostics are loaded automatically from the diskette. The Copyright/Diagnostics Option panel (Menu 1) appears and a short beep is sounded. Follow the instructions on this panel to run the diagnostic routines.

If the Copyright/Diagnostics Option panel does not appear, go to the diagnostics for your system unit or have your system unit serviced.

Running the Adapter Diagnostics

This section shows you how to run the Adapter Diagnostics by making selections from a series of menus. If you have run the diagnostics before and only need to refer to the menus periodically you can refer to page 3-7 for a quick-reference guide to the content of these menus and their relationship to each other. Special key functions used in executing the Diagnostics are described. Each menu is shown as it appears on the panel. A list of option selections and a section on how to use the menu are provided for each menu.

Special Key Functions and Quick-Reference Guide

The special key functions for the Adapter Diagnostics are:

The **Enter** key executes each menu option. Always type the option number or letter, then press **Enter**.

Moves display messages to the left (for the color graphics monitor only).

Moves display messages to the right (for the color graphics monitor only).

Directs panel output to printer.

Cancels output to printer.

Stops the scrolling of logged error messages.

Note: To resume scrolling, press any key.

Resets the diagnostics.

The figure on page 3-7 summarizes the content of the Adapter Diagnostics menus and illustrates their relationships to each other.

Menu 1

```
The IBM TOKEN-RING NETWORK PC ADAPTER
          DIAGNOSTICS
Version 1.03 (C) Copyright IBM Corp 1988

SELECT ONE OF THE FOLLOWING:

0-RUN DIAGNOSTIC ROUTINES
9-EXIT TO SYSTEM DISKETTE

ENTER THE NUMBER OF YOUR SELECTION
?
```

Menu 2

```
THE INSTALLED TOKEN-RING ADAPTERS ARE:

S  Primary IBM Token-Ring Network PC Adapter
S  Alternate IBM Token-Ring Network PC Adapter

IS THE LIST CORRECT (Y/N)?
```

Menu 3

```
SYSTEM CHECKOUT
SELECT ONE OF THE FOLLOWING:

0-RUN TESTS ONE TIME
1-RUN TESTS MULTIPLE TIMES
2-LOG UTILITIES
9-EXIT DIAGNOSTIC ROUTINES

ENTER THE NUMBER OF YOUR SELECTION
?
```

Menu 4

```
LOG UTILITIES
SELECT ONE OF THE FOLLOWING:

0-START ERROR LOG
1-STOP ERROR LOG
2-LIST LOG
3-SET TIME OF DAY
4-DISPLAY TIME OF DAY
9-RETURN FROM UTILITIES

ENTER THE NUMBER OF YOUR SELECTION
?
```

Menu 5

```
ENTER NUMBER OF TIMES TO RUN TESTS
OR PRESS ENTER TO RUN CONTINUOUSLY
?

WAIT EACH TIME AN ERROR OCCURS (Y/N) ?
```

Menu 6

```
ALTER THE FIRST TWO DIGITS OF SHARED RAM STARTING ADDRESS OR
USE: D8000 MEMORY RANGE TO BE TESTED: D8000 THROUGH D9FFF

TESTING - Primary IBM Token-Ring Network PC Adapter

PRESS SPACE BAR FOR NEXT AVAILABLE BOUNDARY.
PRESS ENTER TO SELECT.
```

Menu 7

```
TESTING - Primary IBM Token-Ring Network PC Adapter

ADAPTER ADDRESS: 10005A000188     CODE LEVEL: F0 F0F0 A338028
INTERRUPT LEVEL: 2                ROM ADDRESS: CC000
SHARED RAM SIZE: 16Kb             RAM ADDRESS: D8000


CABLE DESCRIPTION

  1 - IBM TOKEN-RING NETWORK PC ADAPTER CABLE
  2 - CABLE WITH A MODULAR TELEPHONE PLUG
      (TYPE 3 MEDIA FILTER)

SELECT THE NUMBER OF THE OPTION WHICH BEST
DESCRIBES THE CABLE CONNECTED TO THE IBM
TOKEN-RING NETWORK PC ADAPTER ?
```

Menu 3

Menu 1 - Copyright/Diagnostic Options

```
The IBM TOKEN-RING NETWORK PC ADAPTER *
          DIAGNOSTICS
Version 1.00 (C) Copyright IBM Corp 1985


SELECT ONE OF THE FOLLOWING:

0 - RUN DIAGNOSTIC ROUTINES
9 - EXIT TO SYSTEM DISKETTE


ENTER THE NUMBER OF YOUR SELECTION
?
```

Type your selection and press enter.

The following options define the possible selections you can make from Menu 1:

- **0 – RUN DIAGNOSTIC ROUTINES**

  Starts the IBM Token-Ring Network PC adapter diagnostic procedures (moves to Menu 2).

- **9 – EXIT TO SYSTEM DISKETTE**

  Ends the Adapter Diagnostics and loads the operating system from diskette or fixed disk.

Using Menu 1

DID THE COPYRIGHT/DIAGNOSTIC OPTIONS PANEL APPEAR ON YOUR DISPLAY?

If **Yes**, type **0**, then press **Enter** to run the Adapter Diagnostics.

If **No**, refer to the problem determination section of your computer's *Guide to Operations* or *Hardware Maintenance and Service* manual. Type **9** and press **Enter** to terminate the Adapter Diagnostics and load the operating system.

Menu 2 — Installed Adapters List

If one IBM Token-Ring Network PC adapter is installed in your computer, only that adapter should be listed on this menu. If two adapters are installed, both should be listed on the panel, as shown below.

The path to Menu 2 is Menu 1:

```
THE INSTALLED TOKEN-RING ADAPTERS ARE:

S  Primary IBM Token-Ring Network PC Adapter
S  Alternate IBM Token-Ring Network PC Adapter

IS THE LIST CORRECT (Y/N)?
```

The following options define the possible selections you can make from Menu 2:

- **Y**

  Proceeds to Menu 3 (System Checkout).

- **N**

  Displays a system board error "199."

  Note: If the adapter is installed, check for proper switch settings and proper installation of the adapter. Re-run the diagnostics; if an adapter continues to be incorrectly listed, have your system serviced.

Using Menu 2

IS THE LIST OF INSTALLED ADAPTERS CORRECT?

If **Yes**, type **Y**, then press **Enter**. Menu 3 appears.

If **No**, type **N**, then press **Enter**. Have your system unit serviced or repaired.

Menu 3 — System Checkout

The path to Menu 3 is:

1. Menu 1
2. Menu 2.

```
SYSTEM CHECKOUT
SELECT ONE OF THE FOLLOWING:

0 - RUN TESTS ONE TIME
1 - RUN TESTS MULTIPLE TIMES
2 - LOG UTILITIES
9 - EXIT DIAGNOSTIC ROUTINES

ENTER THE NUMBER OF YOUR SELECTION
?
```

Type your selection and press Enter.

The following options define the selections you can make from Menu 3:

- **0 – RUN TESTS ONE TIME**

  Runs the diagnostic tests once and returns to Menu 3. Branches to Menu 6 the first time 0 is invoked. Otherwise, it runs diagnostics and returns to Menu 3.

- **1 – RUN TESTS MULTIPLE TIMES**

  Runs the diagnostics on all the IBM Token-Ring Network PC adapters installed in your computer and then returns to Menu 3. Exits Menu 3 to go to Menu 5.

- **2 – LOG UTILITIES**

  Allows you to use one of the log utilities. Exits Menu 3 to go to Menu 4.

- **9 – EXIT DIAGNOSTIC ROUTINES**

  Exits Menu 3 and returns to Menu 1.

Using Menu 3

WHICH TEST FUNCTION DO YOU WANT TO EXECUTE?

Type **0** and press **Enter** to run tests one time. Prompts you to disconnect the adapter you are testing from the network. If an error is detected the panel on page 3-26 is shown. Otherwise, the panel on page 3-25 is shown. Exits Menu 3 to go to Menu 6 the first time. If not first time, runs diagnostics and returns to Menu 3.

Type **1** and press **Enter** to run tests multiple times. Exit Menu 3 to go to Menu 5.

Type **2** and press **Enter** to use one of the log utilities. Exit Menu 3 to go to Menu 4.

Type **9** and press **Enter** to exit Menu 3 and return to Menu 1.

Menu 4 — Log Utilities

The path to Menu 4 is:

1. Menu 1
2. Menu 2
3. Menu 3 (only if LOG UTILITIES is selected from Menu 3).

```
LOG UTILITIES
SELECT ONE OF THE FOLLOWING:

0 - START ERROR LOG
1 - STOP ERROR LOG
2 - LIST LOG
3 - SET TIME OF DAY
4 - DISPLAY TIME OF DAY
9 - RETURN FROM UTILITIES

ENTER THE NUMBER OF YOUR SELECTION
?
```

Type your selection and press enter.

The following options define the selections you can make from Menu 4:

- **0 – START ERROR LOG**

  Records failures detected by the Adapter Diagnostics. These error messages can be printed out at a printer or transferred to a diskette. If you send the messages to a diskette, use a formatted non-write-protected diskette.

- **1 – STOP ERROR LOG**

  Stops recording the failures detected by the Adapter Diagnostics.

- **2 – LIST LOG**

  Displays the log of error messages recorded on diskette.

- **3 – SET TIME OF DAY**

  Sets the current time of day using a 24-hour clock. The computer keeps track of the time and displays it when requested.

- **4 – DISPLAY TIME OF DAY**

  Displays the time of day. The contents may be modified by the Set Time of Day function.

- **9 – RETURN FROM UTILITIES**

  Exits Menu 4 to return to Menu 3 (System Checkout).

Using Menu 4

WHICH LOG UTILITY DO YOU WANT TO USE?

Select option **0**, **1**, **2**, **3**, or **4**, pressing **Enter** after selection. The selected option will be executed, and the diagnostics will return to Menu 4.

Select **9** and press **Enter** to exit Menu 4 and return to Menu 3.

Menu 5 — Running Tests Multiple Times

The path to Menu 5 is:

1. Menu 1
2. Menu 2
3. Menu 3 (only if RUN TESTS MULTIPLE TIMES was selected on Menu 3).

```
ENTER NUMBER OF TIMES TO RUN TESTS
OR PRESS ENTER TO RUN CONTINUOUSLY
?

WAIT EACH TIME AN ERROR OCCURS (Y/N) ? [1]
```

[1] This line is displayed only after a response is entered for the first question.

The following options define the selections you can make from Menu 5:

- Number

  Represents the number of times you want to run the diagnostic tests. Valid numbers are 1 through 65,534.

- Blank

  Runs the diagnostic test continuously. Press **Ctrl C** to stop the tests.

After selecting one of these options and pressing **Enter**, the menu prompts you to select whether or not the test should wait each time an error occurs.

- **Y**

  Stops testing temporarily each time an error is encountered.

- **N**

  Does not stop each time an error occurs.

Using Menu 5

HOW MANY TIMES DO YOU WANT TO RUN TESTS?

and

DO YOU WANT TO WAIT EACH TIME AN ERROR OCCURS?

Enter the number of times you want to run the test and press **Enter**. Then select **Y** or **N** and press **Enter** in response to the second prompt.

Leave the field blank and press **Enter** if you want the test to run continuously. Then select **Y** or **N** and press **Enter** in response to the second prompt.

Exits Menu 5 to go to Menu 6 the first time. Otherwise, runs diagnostics and returns to Menu 3.

Menu 6 — Shared RAM Selection

The path to Menu 6 is:

1. Menu 1
2. Menu 2
3. Menu 3
4. Menu 5 (only if RUN TESTS MULTIPLE TIMES was selected on Menu 3).

```
ALTER THE FIRST TWO DIGITS OF SHARED RAM STARTING ADDRESS OR
USE:D8000  MEMORY RANGE TO BE TESTED: D8000 THROUGH D9FFF

TESTING - Primary IBM Token-Ring Network PC Adapter


PRESS SPACE BAR FOR NEXT AVAILABLE BOUNDARY.
PRESS ENTER TO SELECT.
```

The following option defines the selection you can make from Menu 6:

- Shared RAM Address

The address entered or selected on this menu specifies the Shared Ram address range to be tested by the diagnostics. The address specified should be the address that is used by the application program to be run on the IBM Token-Ring Network PC adapter.

Do not use an address that conflicts with the addresses being used by this or other devices or adapters in the system unit.

Menu 6 exits to Menu 7.

Using Menu 6

WHAT IS THE ADDRESS OF THE SHARED RAM SPACE?

Enter the first two digits of the Shared RAM starting address. You can type over the displayed value to enter your own value.

OR

Press the **Space** bar for the next available boundary. The Diagnostic will automatically locate BIOS modules in the machine and skip around them. The value selected should be the same address range used by your application program.

If the address used by the application program is not displayed as you step through the available addresses, you should check your system and adapters for conflicting addresses.

Press **Enter** to select the displayed value. If an invalid address is entered, an error panel is displayed and the diagnostics will return to Menu 6.

Menu 7 — Cable Description

The path to Menu 7 is:

1. Menu 1
2. Menu 2
3. Menu 3
4. Menu 5 (only if RUN TESTS MULTIPLE TIMES was selected on Menu 3)
5. Menu 6 (only when the diagnostics are first loaded).

Note: After a cable has been selected for each adapter, this menu will be bypassed until the system is restarted.

```
TESTING - Primary IBM Token-Ring Network PC Adapter

ADAPTER ADDRESS: 10005A000188     CODE LEVEL: F0 F0F0 A33802B
INTERRUPT LEVEL: 2               ROM ADDRESS: CC000
SHARED RAM SIZE: 16Kb            RAM ADDRESS: D8000


CABLE DESCRIPTION

  1 - IBM TOKEN-RING NETWORK PC ADAPTER CABLE
  2 - CABLE WITH A MODULAR TELEPHONE PLUG
      (TYPE 3 MEDIA FILTER)

SELECT THE NUMBER OF THE OPTION WHICH BEST
DESCRIBES THE CABLE CONNECTED TO THE IBM
TOKEN-RING NETWORK PC ADAPTER ?
```

Type your selection and press Enter.

The following options define the selections you can make for Menu 7:

- **1 – IBM TOKEN-RING NETWORK PC ADAPTER CABLE**

  Runs the diagnostics and returns to Menu 3.

- **2 – CABLE WITH A MODULAR TELEPHONE PLUG**

  Runs the diagnostics and returns to Menu 3.

Using Menu 7

WHAT TYPE OF CABLE IS YOUR ADAPTER INSTALLED WITH?

Type **1** or **2** for the type of cable most appropriate to your situation.

If **1**, disconnect the adapter cable from the network. Make sure that the other end of the cable is still connected to the adapter. If your system unit has two IBM Token-Ring Network PC adapters, disconnect both cables from the network.

If **2**, disconnect the cable with the modular telephone plug from the adapter. Connect the wrap plug that came with the cable to the adapter. If your system unit has two IBM Token-Ring Network PC adapters, disconnect both cables and install wrap plugs on both adapters.

Press **Enter** to run the diagnostics. After the diagnostic routines are successfully completed, the panel shown in Figure 3-1 on page 3-25 is displayed and Menu 3 appears again.

After Running the Diagnostics

After the diagnostics have run successfully, do one of the following for each IBM Token-Ring Network PC adapter in your system unit:

Note: If the network is new, see "Checking the Operation of the Ring and the Installation Devices" in the *IBM Token-Ring Network Installation Guide* before connecting your computer to the network.

- If your network uses IBM Cabling System data grade media, connect your adapter cable to the network.
- If your network uses telephone twisted-pair media, remove the wrap plug and connect the Type 3 Media Filter, or equivalent, to the adapter.

Adapter Diagnostics Messages

The message information for the Adapter Diagnostics is displayed as follows:

```
TESTING - Primary IBM Token-Ring Network PC Adapter

                Adapter Status Area
ADAPTER ADDRESS: 10005A000043        CODE LEVEL: F0 F0F0 A33802C
INTERRUPT LEVEL: 2                  ROM ADDRESS: CC000
SHARED RAM SIZE: 16Kb               RAM ADDRESS: D8000

 0:13:21
ERROR -  Primary IBM Token-Ring Network PC Adapter  166D0

PRESS ENTER TO CONTINUE
?
                          Testing Status and Error Message Area
```

Notice that the message information is divided into two areas:

- Adapter Status Area
- Testing Status and Error Message Area.

Adapter Status Area

The adapter status area provides the following specific status information about the adapter:

- Adapter address
- Code level
- Interrupt level
- ROM address
- Shared RAM size
- Shared RAM address.

Notes:

1. For explanations of interrupt level and ROM address, see "Setting the Switches" on page 2-2.
2. For an explanation of Shared RAM size, see "Setting the Shared RAM Size Switch" on page 2-7.
3. For an explanation of Shared RAM address, see "Menu 6 — Shared RAM Selection" on page 3-18.

Testing Status and Error Message Area

The status information is followed by the testing status and error message area, which displays specific error messages and codes. If an error is detected, the error message is displayed after the testing status message. See "Message Listings" on page 3-27 for a complete listing of the messages, their meanings and the recommended action for each.

Diagnostic Test - No Error

This message indicates that the primary adapter has passed the diagnostic testing. After this panel is displayed for six seconds, it will clear and Menu 3 will be displayed.

```
TESTING - Primary IBM Token-Ring Network PC Adapter

ADAPTER ADDRESS: 10005A000043        CODE LEVEL: F0 F0F0 A33802C
INTERRUPT LEVEL: 2                  ROM ADDRESS: CC000
SHARED RAM SIZE: 16Kb               RAM ADDRESS: D8000

Primary IBM Token-Ring Network PC Adapter    16600
```

Diagnostic Test - Error

This message indicates that an error has been detected during the diagnostic tests:

```
TESTING - Primary IBM Token-Ring Network PC Adapter

ADAPTER ADDRESS: 10005A000043        CODE LEVEL: F0 F0F0 A33802C
INTERRUPT LEVEL: 2                 ROM ADDRESS: CC000
SHARED RAM SIZE: 16Kb              RAM ADDRESS: D8000

 0:13:21
ERROR -  Primary IBM Token-Ring Network PC Adapter  166D0

PRESS ENTER TO CONTINUE
?
```

ADAPTER SUPPORT CODE FOUND ON THIS DISK IS INCOMPATIBLE WITH THIS VERSION OF DIAGNOSTIC

Meaning: The Adapter Diagnostics have detected a fault with the Adapter Support Interface.

Action: Recopy the Adapter Support Interface onto the diskette you are using. If the problem continues, see your place of purchase.

ALTERNATE ADAPTER NOT PRESENT

Meaning: The Adapter Diagnostics cannot locate the adapter that you listed in any of your computer's expansion slots.

Action: Have your system unit serviced. If your system unit uses an IBM Token-Ring Network PC Adapter Cable, have it serviced also.

ALTERNATE IBM TOKEN-RING NETWORK PC ADAPTER 16700 S

Meaning: No errors were detected while testing the alternate adapter.

Action: No action required.

COULD NOT FIND ADAPTER SUPPORT CODE ON DISK

Meaning: The Adapter Diagnostics cannot find a copy of the Adapter Support Interface on the default drive.

Action: If you are using a working copy of the Adapter Diagnostics, recopy the TOKREUI.COM file. If the problem continues or if you are using the original copy of the Adapter Diagnostics, run the diagnostics provided with your IBM PC's *Guide to Operations* to determine if the disk drive is operating properly.

ERROR ENCOUNTERED WHILE ATTEMPTING TO READ ADAPTER SUPPORT CODE FROM DISKETTE

Meaning: The Adapter Diagnostics were unable to load the Adapter Support Interface from the default drive.

Action: If you are using the original copy of the Adapter Diagnostics, run the diagnostics provided with your IBM PC's *Guide to Operations*.

If you are using a working copy of the Adapter Diagnostics, recopy the TOKREUI.COM file. If the problem continues, make a new copy of the program on a newly formatted diskette. If the problem still continues, run the diagnostics provided with your IBM PC's *Guide to Operations*.

ERROR -- PRIMARY IBM TOKEN-RING NETWORK PC ADAPTER 166XX

ERROR -- ALTERNATE IBM TOKEN-RING NETWORK PC ADAPTER 167XX

Meaning: The Adapter Diagnostics have detected a problem with either the Primary or Alternate adapter. To determine the cause of the failure, match the number found after the 166 or 167 with the error codes below:

Error Codes:

F0--Invalid testing mode requested

F1--Primary/alternate adapter not present

F2--Adapter Support Interface code not found

F3--Diskette read error

F4--Incompatible Adapter Support Interface code

E0--Adapter test failure

D0--Open phase test failure

C0--Personal Computer problem

A0--Transmit/Receive test failure

Action: Make sure that the switch settings (see "Setting the Switches" on page 2-2) are correct and that the Shared RAM memory range defined in Menu 6 does not conflict with other devices/adapters in the control unit. You may consider trying to use another memory range.

If the switches are set correctly and the memory range is not in conflict, have your system unit serviced. If your system unit uses an IBM Token-Ring Network PC Adapter Cable, have it serviced also.

INVALID DIAGNOSTIC MODE SELECTED

Meaning: The Adapter Diagnostics have received a test request from the Diagnostic Control Program, DIAGS.COM, that it cannot interpret.

Action: If you are using a working copy of your original IBM Token-Ring Network PC Adapter Diagnostics, recopy the DIAGS.COM file. If the problem continues or if you are using the original copy of the Adapter Diagnostics, see your place of purchase.

INVALID BOUNDARY VALUE ENTERED

Meaning: The Shared RAM Address entered is not on a proper boundary.

Action: Press **Enter** to return to Menu 6, SHARED RAM SELECTION, and enter a proper value.

PRIMARY ADAPTER NOT PRESENT

Meaning: The Adapter Diagnostics cannot locate the adapter that you listed in any of the your computer's expansion slots.

Action: Have your system unit serviced. If your system unit uses an IBM Token-Ring Network PC Adapter Cable, have it serviced also.

PRIMARY IBM TOKEN-RING NETWORK PC ADAPTER 16600 S

Meaning: No errors were detected while testing the primary adapter.

Action: No action required.

SHARED RAM ADDRESS ENTERED CONFLICTS WITH ANOTHER DEVICE/ADAPTER

Meaning: The diagnostic has found a BIOS module that conflicts with the Shared RAM address that was selected.

Action: Press **Enter** to return to Menu 6, SHARED RAM SELECTION, and enter a different value.

Chapter 4. Using the Adapter Support Interface

Disregard this chapter if you are using the IBM Local Area Network Support Program. Refer to the *IBM Local Area Network Support Program User's Guide* for information on using that Adapter Support Interface.

The Adapter Support Interface allows a network application program in the computer to communicate with the IBM Token-Ring Network. The Adapter Support Interface is also required by the IBM Token-Ring Network PC Adapter Diagnostics.

Following are instructions to copy and load the Adapter Support Interface and related files onto a fixed disk or working diskette. After loading, these files remain in the computer's memory until the computer is turned off or restarted. If the files are not loaded into the computer, the application program will not be able to communicate with the IBM Token-Ring Network.

Some application programs (such as the IBM Token-Ring Network Bridge Program) may not require use of the Adapter Support Interface. See the appropriate application program documentation.

Instructions for a Fixed Disk

Note: For more information on DOS commands, see your DOS manual.

1. Copy the Adapter Support Interface file (TOKREUI.COM) from the IBM Token-Ring Network PC Adapter Diskette onto your **C** disk using the DOS COPY command.

2. Go to "System Configuration Information" on page 4-9 and follow the instructions to properly configure your system for the IBM Token-Ring Network.

3. Go to "The Adapter Support Interface Batch File (ASILOAD)" on page 4-4 and follow the instructions for loading the Adapter Support Interface.

4. If you want to use an application program on the IBM Token-Ring Network, refer to the documentation supplied with the application program to load and use it.

Instructions for a Working Diskette

Note: For more information on DOS commands, see your DOS manual.

1. Make sure the working diskette has been formatted as a system diskette. (Use the DOS FORMAT command with the /S option.)

2. Copy the Adapter Support Interface file (TOKREUI.COM) from the IBM Token-Ring Network PC Adapter Diskette onto your working diskette using the DOS COPY command.

3. Go to "System Configuration Information" on page 4-9 and follow the instructions to properly configure your system for the IBM Token-Ring Network.

4. Go to "The Adapter Support Interface Batch File (ASILOAD)" on page 4-4 and follow the instructions for loading the Adapter Support Interface.

5. If you want to use an application program on the IBM Token-Ring Network, refer to the documentation supplied with the application program to load and use it.

The Adapter Support Interface Batch File (ASILOAD)

The ASILOAD file makes use of a DOS indicator called ERRORLEVEL to cause a specific message to be returned following each load attempt. The message will be determined by the ERRORLEVEL setting. These possible settings are:

0 — The Adapter Support Interface was loaded successfully.

1 — A version of the Adapter Support Interface was already in memory. This version was not loaded.

2 — One or both adapter addresses are invalid. The Adapter Support Interface was not loaded.

3 — One or both Shared RAM locations are invalid. The Adapter Support Interface was not loaded.

To load the Adapter Support Interface, do one of the following:

- If you want the Adapter Support Interface to be loaded automatically every time you start the computer, code the lines of the ASILOAD file in your AUTOEXEC.BAT file.

  The next time you start your computer or perform a system reset, the Adapter Support Interface will load automatically.

- If you want to load the Adapter Support Interface manually, code the ASILOAD file as follows and save it as ASILOAD.BAT. Load the Adapter Support Interface by typing **ASILOAD** and pressing **Enter**.

Return to "Instructions for a Fixed Disk" on page 4-2 or "Instructions for a Working Diskette" on page 4-3.

The ASILOAD File

TOKREUI < See "Adapter Parameters" on page 4-6. >

```
echo off
if errorlevel 3 goto T3
if errorlevel 2 goto T2
if errorlevel 1 goto T1
if errorlevel 0 goto T0
:T3
echo One or both Shared RAM locations are invalid.
echo The Adapter Support Interface was not loaded.
goto exit
:T2
echo One or both adapter addresses are invalid.
echo The Adapter Support Interface was not loaded.
goto exit
:T1
echo A version of the Adapter Support Interface
echo was already in memory.
echo This version was not loaded.
goto exit
:T0
echo The Adapter Support Interface was loaded
echo successfully.
:exit
```

If you need more information to use ERRORLEVEL, see "Batch Commands" in the DOS manual.

Adapter Parameters

There are two kinds of adapter parameters: adapter addresses and Shared RAM locations.

Adapter Addresses

Each adapter already has an address that has been assigned at the time of manufacture and permanently encoded in the adapter's memory. This address is in the range that is administered universally by the standard committees for local area networks. This universally administered address is the default address for the adapter if no other address is assigned.

If your network administrator chooses, he may assign a locally administered address that will override the universally administered address on the adapter. This address must consist of 12 hexadecimal digits that range from '4000 0000 0000' to '4000 7FFF FFFF'. Values outside this range may be incompatible with other products on the network.

For typical network installations, it is recommended that the address be restricted to decimal values. The locally administered address would then range from '4000 0000 0000' to '4000 7999 9999' decimal.

Note: Make sure the address is recorded on the physical and logical address Locator Charts. These charts and an explanation of them can be found in the *IBM Token-Ring Network Introduction and Planning Guide*. See the *IBM Token-Ring Network Administrators Guide* for guidance on assigning locally administered addresses.

Warning: Each address must be unique on the network. An error will result when two or more adapters with the same address attempt to use the network.

To code the adapter address, see "Coding Adapter Parameters" on page 4-8.

Shared RAM

The IBM Token-Ring Network PC Adapter II contains random access memory (RAM) that is shared with the system unit. Valid locations must consist of four hexadecimal digits that represent the upper four digits of a five-digit hexadecimal address. This location should be on a 16-Kb boundary. The default memory location for the primary adapter (where the system unit finds the RAM) is D800. For the alternate adapter it is D400. If the features that your system unit has installed use these locations, you will need to assign other locations that are not used. The IBM Token-Ring Network PC Adapter II needs 8 Kb of memory above this address when Switch 10 is **On** and 16 Kb of memory above this address when Switch 10 is **Off**.

To find locations that can be used, see Appendix B for a list of IBM-defined memory locations. To code the Shared RAM location, see the next section, "Coding Adapter Parameters" on page 4-8.

Note: If you have two adapters, the Shared RAM address for the alternate adapter must be different from the primary adapter.

Coding Adapter Parameters

To specify a locally administered address for the primary adapter, add parameters to the TOKREUI line, as in the following example:

TOKREUI 400000000001

In this example, '400000000001' is the new address for the primary adapter, which will override the default address encoded on the adapter. All other defaults will be retained.

To specify a new Shared RAM location for the primary adapter, add the parameter to the TOKREUI line as in the following example:

TOKREUI ,C400

In this example, 'C400' is the new Shared RAM location for the primary adapter. The default location for the primary adapter will be overridden. All other defaults will be retained. Note the comma before the RAM location. This indicates that a parameter (the primary adapter address) has been omitted.

If two adapters are installed in the same system unit, the parameters are entered with the primary coded first and the alternate second. When coding a parameter list, observe these rules:

- Use a blank to separate the parameter list from "TOKREUI."
- Use a comma to separate one parameter from another.
- Indicate an omitted parameter with a comma. If one or more parameters are omitted from the end of the list, the commas are unnecessary.

Here are three more coding examples:

TOKREUI 400000000001,,400000000002

In this example '400000000001' is the address for the primary adapter, and '400000000002' is the address for the alternate adapter. The second comma in the list indicates that the default value for the primary Shared RAM location is being retained. The alternate Shared RAM location is also retained since nothing is coded after the alternate adapter address in the list.

TOKREUI ,C400,,D000

In this example 'C400' is the Shared RAM location for the primary adapter, and 'D000' is the Shared RAM location for the alternate adapter. The default addresses for the primary and alternate adapters will be retained.

TOKREUI 400000000001,C400,400000000002,D000

In this example, the defaults for both adapter addresses and both Shared RAM locations have been changed.

System Configuration Information

The following procedure tells you how to configure your system using the STACK line command.

1 Before starting the IBM Token-Ring Network, you should add a line to the CONFIG.SYS file to allocate the maximum number of stacks.

This allocation of stack resources reduces the likelihood of the DOS internal stack error (see "The DOS Internal Stack Error" on page 4-11) on an active IBM Token-Ring Network. (This allocation of stack resources may not be necessary for DOS version 3.3 or higher.)

2 Format the STACK line as follows:

STACKS=XX,YYY

XX (a decimal number between 8 and 64) represents the number of stacks allocated.

YYY (a decimal number between 32 and 512) represents the size of each stack.

The DOS 3.2 default is 9 stacks at 128 bytes each.

3 Code the line as follows:

STACKS=64,128

4 Refer to system configuration information in your DOS manual for information about the CONFIG.SYS file.

5 Restart your computer by turning the system unit's power off, then on.

6 Return to "Instructions for a Fixed Disk" on page 4-2 or "Instructions for a Working Diskette" on page 4-3 if you came from one of these procedures.

The DOS Internal Stack Error

Below is the error message that DOS 3.2 or later will display if the available stack resources are exceeded.

FATAL : INTERNAL STACK ERROR, SYSTEM HALTED

Meaning: The available stack resources were exceeded; this can happen in an active interrupt environment. For instance, a server in heavy traffic could exceed the stack resources.

Action: Turn your system unit's power off, then on. Increase your stack resources as indicated above (see "System Configuration Information" on page 4-9).

Corrected code is provided on a cumulative basis on diskettes; no source code is provided. Only one copy of the corrections with supporting documentation will be issued to the customer coordinator or authorized dealer. IBM will authorize various agents, such as IBM Personal Computer dealers and service coordinators of IBM North/Central and IBM South/West Marketing Division customers, to make and distribute a copy of the corrections, if needed, to each IBM Token-Ring Network PC Adapter Support Interface user that they serve.

The total number of copies of an update distributed to IBM

List of Abbreviations

BSC	Binary Synchronous Communication
DOS	Disk Operating System
PC	Personal Computer
POST	Power-On Self Test
RAM	random access memory
ROM	read-only memory
SDLC	Synchronous Data Link Control

Glossary

A

adapter. The circuit card within a communicating device (such as an IBM Personal Computer) and its associated software, that enable the device to be attached to a network.

application program. A program written for or by a user that applies to the user's work.

D

diagnostics diskette. A diskette used by computer users and service personnel to diagnose hardware problems.

Disk Operating System (DOS). A program that controls the operation of an IBM Personal Computer and the execution of application programs.

F

formatted diskette. A diskette that can be used by the computer to store data.

P

POST. Power-On Self Test. A series of diagnostic tests that are run each time the computer's power is turned on.

R

random access memory (RAM). A storage device into which data are entered and from which data are retrieved in a nonsequential manner.

read-only memory (ROM). A computer's storage area whose contents cannot be modified.

ring (network). A network configuration where a series of attaching devices, such as IBM Personal Computers, are connected by unidirectional transmission links to form a closed path.

T

token. A sequence of bits passed from one device to another along the network.

W

working diskette. A computer diskette to which files are copied from an original diskette for use in everyday operation.

Index

A

Adapter 1-1, 2-21
adapter addresses 4-6
  installing adapter addresses 4-6
  locally administered address 4-6
adapter cable 2-31
Adapter Diagnostics 3-1
  loading 3-1
  Menu 1 3-8
  Menu 2 3-10
  Menu 3 3-12
  Menu 4 3-14
  Menu 5 3-16
  Menu 6 3-18
  Menu 7 3-20
  messages 3-23
  running 3-5
Adapter II 1-1, 2-21
  switch location 2-3
Adapter II Kit 1-2, 1-3
adapter labels 2-9
adapter parameters 4-6
  installing adapter parameters 4-6
  universally administered address 4-6
Adapter Support Interface 1-3, 4-1
ASILOAD 4-4

B

batch loading results 4-4

C

checkout 3-13
configuration information, system 4-9
connecting the adapter cable 2-31
copying files, fixed disk 4-2
copying files, working diskette 4-3

D

diagnostic routines 3-9
Diagnostic Test - Error 3-26
Diagnostic Test - No Error 3-25
diagnostics (see Adapter Diagnostics)
Directory List A-1
Disk Operating System (DOS) viii
diskette files listed A-1
display time 3-15
DOS viii
DOS error 4-11
DOS system configuration information 4-9
  internal stack error 4-11

E

Error Log 3-15

F

fatal error 4-11
files listed A-1
fixed disk warning 2-14
fixed disk, using 4-2
  automatic file loading 4-2
  copying files 4-2
function keys 3-6

I

IBM Industrial Computer 2-13
IBM PC and IBM Personal System/2 memory B-1
IBM Personal System/2 2-11
IBM Portable Personal Computer 2-12
IBM Token Ring Network PC Adapter and Adapter II 2-21
IBM Token-Ring Network PC adapter 1-1
IBM Token-Ring Network PC Adapter Diagnostics 3-1
IBM Token-Ring Network PC Adapter Diskette 1-3
installing the adapters 2-1
  IBM Industrial Computer 2-13
  IBM PC, IBM PC XT, IBM Personal Computer AT 2-14
  IBM Personal System/2 2-11
  IBM Portable Personal Computer 2-12
internal stack error 4-11
interrupt level switch 2-4

L

labels, adapter 2-9
List Log 3-15
loading results 4-4

M

memory map B-1
message listings 3-27

N

needs 1-4

P

prerequisites viii
primary-alternate switch 2-6
publications, related vii

Q

quick-reference guide, diagnostics 3-6

R

read-only memory (ROM) 2-4
reinstalling the cover
  IBM PC and IBM PC XT 2-27
  IBM Personal Computer AT 2-29
related publications vii
relocation 2-14
removing the cover
  IBM PC and IBM PC XT 2-17
  IBM Personal Computer AT 2-19
ring X-3
Ring Diagnostic 1-3
ROM 2-4
routines 3-9

S

service, statement of C-1
set time of day 3-15
setting switches 2-2
  interrupt level switch 2-4
  primary-alternate switch 2-6
  ROM switches 2-4
  Shared RAM size 2-7
  switches 11 and 12 2-8
Shared RAM 3-18, 4-7, B-2

special function keys 3-6
system checkout 3-13

T

time set 3-15
tools 2-14

U

unlocking the IBM PC 2-19

W

warning, correct connections 2-31
warning, fixed disk 2-14
warning, interrupt 2-5
working diskette, using 4-3
  automatic file loading 4-3
  copying files 4-3

Numerics

8-Kb boundaries B-2

IBM

Reader's Comment Form

IBM Token-Ring Network PC Adapter Guide to Operations **96X5734**

Your comments assist us in improving the usefulness of our publications; they are an important part of the input used for revisions.

IBM may use and distribute any of the information you supply in any way it believes appropriate without incurring any obligation whatever. You may, of course, continue to use the information you supply.

Please do not use this form for technical questions regarding the IBM Personal Computer or programs for the IBM Personal Computer, or for requests for additional publications; this only delays the response. Instead, direct your inquiries or request to your authorized IBM Personal Computer dealer.

Comments:

Fold and tape
Please do not staple

NO POSTAGE
NECESSARY
IF MAILED
IN THE
UNITED STATES

BUSINESS REPLY MAIL

FIRST CLASS PERMIT NO. 40 ARMONK, N.Y.

POSTAGE WILL BE PAID BY ADDRESSEE

IBM Corporation
Department E02
P.O. Box 12195
Research Triangle Park, N.C.
27709-9990

IBM

Reader's Comment Form

IBM Token-Ring Network PC Adapter Guide to Operations **96X5734**

Your comments assist us in improving the usefulness of our publications; they are an important part of the input used for revisions.

IBM may use and distribute any of the information you supply in any way it believes appropriate without incurring any obligation whatever. You may, of course, continue to use the information you supply.

Please do not use this form for technical questions regarding the IBM Personal Computer or programs for the IBM Personal Computer, or for requests for additional publications; this only delays the response. Instead, direct your inquiries or request to your authorized IBM Personal Computer dealer.

Comments:

Fold and tape
Please do not staple

NO POSTAGE
NECESSARY
IF MAILED
IN THE
UNITED STATES

BUSINESS REPLY MAIL

FIRST CLASS PERMIT NO. 40 ARMONK, N.Y.

POSTAGE WILL BE PAID BY ADDRESSEE

IBM Corporation
Department E02
P.O. Box 12195
Research Triangle Park, N.C.
27709-9990

International Business Machines Corporation

Dept. E02
P.O. Box 12195
Research Triangle Park, N.C. 27709-2195

96X5734

Printed in Canada